RD20190830E

RESOURCE DEVELOPMENT CATALOG

FUKUI

FUKUI SEISAKUSHO CO., LTD.

Resource Development

Raw materials and energy resources such as natural gas and petroleum are transported by liquefied gas carriers and oil tankers to receiving facilities in Japan and other consuming countries. These resources find wide use as the raw materials in petrochemicals and chemistry, and in other applications such as power production and household fuels. As a specialized maker of safety valves, Fukui has a vast assortment of valves that can meet every need for safety pressure relief, which is of vital importance in the drilling of these resources, and their liquefaction, refining, shipment, transport, receiving, storage, and consumption. Out products are designed, manufactured, and inspected on the basis of our long years of experience in this field, and by using the store of technological expertise we have built through that experience. Customers can thereby expect products of the finest quality and reliability.

Natural Gas and Petroleum Drilling, Refining, Storage, and Receiving terminals

We select safety valves that are best suited to the state (liquid, gas, pressure, temperature, and other specifications)of a fluid. From cryogenic temperatures to high temperatures, from negative pressure to vacuum, micropressure, and high pressure, and from among a variety of valve types including spring-loaded safety valves, vacuum relief valves, dead-weight valves, and pilot-operated safety relief valves, we select and deliver safety valves suited to a wide variety of specifications.

Offshore facility

Offshore gas production platform

LNG storage tank

Onshore gas production facility

LNG receiving terminal

REC/REB, RECL/REBL Series
for resources development field

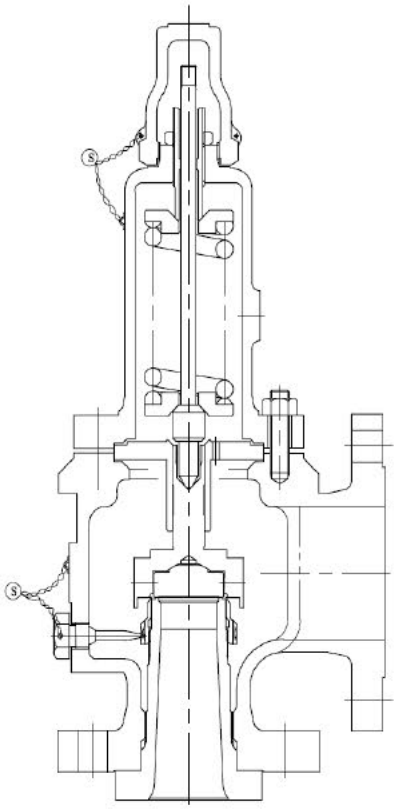

FUKUI SEISAKUSHO CO., LTD.

Overview of the RE series

RE series safety valves are low-cost valves realized by the technology, experience and know-how in designing and manufacturing safety valves that Fukui Seisakusho Co., Ltd. has accumulated over half a century, and they therefore meet a variety of customers' needs for safety pressure relief.

Furthermore, RE series safety valves can handle various fluids including steam, gas and liquid, thus finding wide and popular use in general plants, electric power generation plants, storage facilities and many others. They also boast of the UV stamp (*1) received from ASME (American Society of Mechanical Engineers) as well as the type approvals granted by quite a few classification societies as listed below.

(*1): some safety valves excluded.

● Certifications obtained

American Society of Mechanical Engineers (ASME): UV stamp

● Our safety valves are type approved by the following classification societies.

♦ Nippon Kaiji Kyokai	NK
♦ Lloyd's Register	LR
♦ Bureau Veritas	BV
♦ Det Norske Veritas Germanischer Lloyd	DNV GL
♦ American Bureau of Shipping	ABS
♦ Registro Italiano Navale	RINA
♦ Korean Register of Shipping	KR
♦ China Classification Society	CCS

Contents

1. REC/REB・RECL/REBL (Standard type)

1-1 Type code 2
1-2 Parts name and materials 3
1-3 Dimensions and weight (ASME flange) 6
1-4 Dimensions and weight (JIS flange) 9
1-5 Orifice effective area of safety valve 11
1-6 Cap structure code 12
1-7 API pressure vs. temperature standard 13

2. REC/REB (large bore type)

2-1 Parts name and materials 27
2-2 Dimensions, weight and effective area (ASME flange) 30

3. RECL-PE (forged body type) 31

4. RECLP（for pump pressure relief） 33

5. RECLJ/REBLJ (Jacket type) 34

6. REDW (dead-weight type) 35

7. RE–G/STMG (water sealed type) 36

1-1. Type code

■ REC/REB and RECL/REBL Series Code System

Our type code system is as follows and should be used for selection.

RE	CL	4	6	1	-	3	S1	-	STM	(A)

Indicates cap and lever structures. (See 1-6.)

Symbol 1: Series name and always stated as "RE".

Symbol 2: C/CL — Conventional type
B/BL — Balanced bellows type
(L: liquid)

Symbol 3: Indicates pressure class and inlet flange rating.

Code	Rating (ASME,JPI)	JIS rating
1	150	10
2	300	20
3	300	30
4	600	-
5	900	-
6	1500	-
7	2500	-

Symbol 4: Indicates temperature and standard materials of body.

Code	Temperature range, ℃
9	538～571
8	427～538
7	232～427
6	232～-29
5	-60～-29
4	-101～-60
3	-196～-101
2	～-196

Symbol 5: indicates inlet connecting methods.

Code	Connection type	Code	Connection type
1	ASME flange	4	JIS flange
2	JPI flange	5	Customer's special
3	Welded		

Symbol 6: indicates inlet flange rating other than standard.

Code	Flange rating(ASME、JPI)
3	300
4	600
5	900

Symbol 7:
Indicates body material by two codes.
In the case of NACE or ISO15156, add a symbol after two codes.

Code	Body material		Code	Body material
Non code	A216 WCB	SCPH2	E	A105
C2	A217 WC6	SCPH21	E2	A182 F12
C3	A217 WC9	SCPH32	E3	A182 F22
C4	A217 C5	SCPH61	Non code	-
C5	A352 LCB	SCPL1	E5	A350 LF2

Code	Body material		Code	Body material	
S	A351 CF8	SCS13A	G	A182 F304	SUSF304
S1	A351 CF8M	SCS14A	G1	A182 F316	SUSF316
S2	A351 CF3	SCS19A	G2	A182 F304L	SUSF304L
S3	A351 CF3M	SCS16A	G3	A182 F316L	SUSF316L
S4	A351 CF8C	SCS21	G4	A182 F321	SUSF321

Symbol 8: indicates steam service and water sealed type.

Code	Service
Non code	Gas, Liquid
STM	Steam, Water(over 120℃)
G	water sealed type
STMG	Water sealed type for steam

Material (Nozzle, Disc)
SUS304
SUS316
SUS304L
SUS316L
Monel
Hastelloy B
Hastelloy C

N	・MR0175-2002 & the total back pressure is not more than 0.348MPa
P	・MR0175-2002 & the total back pressure is more than 0.348MPa ・MR0103
R	・ISO15156

For details, please contact our Business Department.

1-2. Parts name and materials

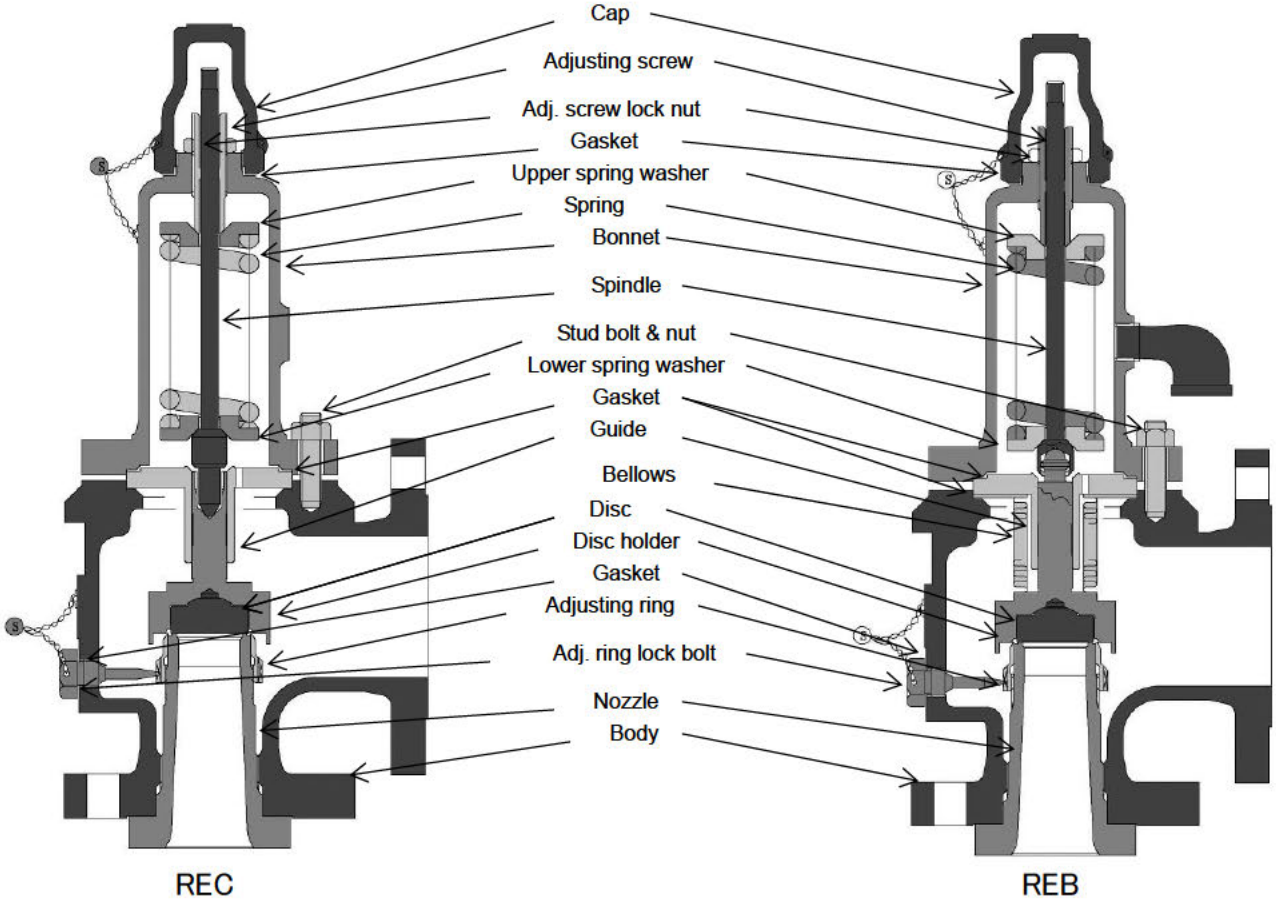

■ REC and REB series parts materials

Parts name		538℃～427℃	427℃～232℃	232℃～-29℃	-29℃～-60℃	-60℃～-101℃	-101℃～-196℃
		REC & REB( )81	REC & REB( )71	REC & REB( )61	REC & REB( )51	REC & REB( )41	REC & REB( )31
Body (Standard material)		A217 WC6 SCPH21	A216 WCB SCPH2		A351 CF8 SCS13A		
Bonnet		A216 WCB SCPH2	A216 WCB SCPH2		A351 CF8 SCS13A		
Cap		SCPH2 or S25C			SCS13A		
Nozzle		SUS304 or SUS13					
* Disc		SUS304					
* Disc holder		SUS403			SUS304		
Adjusting ring		SUS304 or SCS13A					
Adj. ring lock bolt		SUS304	Carbon steel		SUS304		
Guide	Guide sleeve	SUS304	SUS304		SUS304		
	Guide flange	SUS304	A105		SUS304		
Spindle		SUS403			SUS304		
Adjusting screw		SUS403			SUS304		
Adj. screw lock nut		Steel			SUS304		
Spring washer		Steel			SUS304		
Spring		Alloy Steel		Carbon steel or Alloy steel	SUS304		
Stud bolt		SNB7			SUS304		
Nut		Carbon steel			SUS304		
* Bellows		SUS316L					
* Bellows piece		SUS316L					
* Gasket (Cap)		Non asbestos or Steel with less than 0.15% carbon			PTFE		
* Gasket (Bonnet)		Non asbestos or Steel with less than 0.15% carbon			PTFE		
* Gasket (Body)		Non asbestos or Steel with less than 0.15% carbon			PTFE		
* Gasket (Lock bolt)		Non asbestos or Steel with less than 0.15% carbon			PTFE		

* Recommended spare parts
Note: Manufacturing specifications and materials are subject to change without notice.

1-2. Parts name and materials

Parts name		S		S1		S2	
		REC	REB	REC	REB	REC	REB
Body		SCS13A or A351 CF8		SCS14A or A351 CF8M		SCS19A or A351 CF3	
Bonnet		SCS13A or A351 CF8		SCS14A or A351 CF8M		SCS19A or A351 CF3	
Cap		SCS13A		SCS14A		SCS19A	
Nozzle		–		SUS316 or SCS14A		SUS304L or SCS19A	
Disc		–		SUS316		SUS304L	
Disc holder		SUS304		SUS316		SUS304L	
Adjusting ring		–		SUS316 or SCS14A		SUS304 or SCS19A	
Adj. ring lock bolt		SUS304		SUS316		SUS304L	
Guide	Guide sleeve	–		SUS316		SUS304L	
	Guide flange	SUS304		SUS316		SUS304L	
Spindle		SUS304		SUS316		SUS304L	
Adjusting screw		SUS304		SUS316		SUS304L	
Adj. screw lock nut		SUS304		SUS316		SUS304L	
Spring washer		SUS304		SUS316		SUS304L	
Spring		SUS304		SUS316		SUS304	
Stud bolt		SUS304		SUS316		SUS304	
Nut		SUS304		SUS316		SUS304	
Bellows		None	—	None	—	None	—
Bellows piece		None	—	None	—	None	—
Gasket (Cap)		PTFE or SUS		PTFE or SUS		PTFE or SUS	
Gasket(Bonnet)		PTFE or SUS		PTFE or SUS		PTFE or SUS	
Gasket (Body)		PTFE or SUS		PTFE or SUS		PTFE or SUS	
Gasket (Lock Bolt)		PTFE or SUS		PTFE or SUS		PTFE or SUS	

Parts name		S3		S4	
		REC	REB	REC	REB
Body		SCS16A or A351 CF3M		SCS21 or A351 CF8C	
Bonnet		SCS16A or A351 CF3M		SCS21 or A351 CF8C	
Cap		SCS16A		SCS14A	
Nozzle		SUS316L or SCS16A		SUS321 or SCS21	
Disc		SUS316L		SUS321	
Disc holder		SUS316L		SUS316	
Adjusting ring		SUS316L or SCS16A		SUS316 or SCS14A	
Adj. ring lock bolt		SUS316L		SUS316	
Guide	Guide sleeve	SUS316L		SUS316	
	Guide flange	SUS316L		SUS316	
Spindle		SUS316L		SUS316	
Adjusting screw		SUS316L		SUS316	
Adj. screw lock nut		SUS316L		SUS316	
Spring washer		SUS316L		SUS316	
Spring		SUS316		SUS316	
Stud bolt		SUS316		SUS316	
Nut		SUS316		SUS316	
Bellows		None	—	None	—
Bellows piece		None	—	None	—
Gasket (Cap)		PTFE or SUS		PTFE or SUS	
Gasket(Bonnet)		PTFE or SUS		PTFE or SUS	
Gasket (Body)		PTFE or SUS		PTFE or SUS	
Gasket (Lock bolt)		PTFE or SUS		PTFE or SUS	

1-2. Parts name and materials

Parts name		S18	S19	S20	S21
		REB	REB	REB	REB
Body		SCS13A or A351 CF8	SCS14A or A351 CF8M	SCS19A or A351 CF3	SCS16A or A351 CF3M
Bonnet		–	–	–	–
Cap		–	–	–	–
Nozzle		–	SUS316 or SCS14A	SUS304L or SCS19A	SUS316L or SCS16A
Disc		–	SUS316	SUS304L	SUS316L
Disc holder		SUS304	SUS316	SUS304L	SUS316L
Adjusting ring		–	SUS316 or SCS14A	SUS304 or SCS19A	SUS316L or SCS16A
Adj. ring lock bolt		SUS304	SUS316	SUS304L	SUS316L
Guide	Guide sleeve	–	SUS316	SUS3304L	SUS316L
	Guide flange	–	–	–	–
Spindle		–	–	–	–
Adjusting screw		–	–	–	–
Adj. screw lock nut		–	–	–	–
Spring washer		–	–	–	–
Spring		–	–	–	–
Stud bolt		–	–	–	–
Nut		–	–	–	–
Bellows		–	—	—	—
Bellows piece		–	—	—	—
Gasket(Cap)		PTFE or SUS	PTFE or SUS	PTFE or SUS	PTFE or SUS
Gasket(Bonnet)		PTFE or SUS	PTFE or SUS	PTFE or SUS	PTFE or SUS
Gasket(Body)		PTFE or SUS	PTFE or SUS	PTFE or SUS	PTFE or SUS
Gasket(Lock bolt)		PTFE or SUS	PTFE or SUS	PTFE or SUS	PTFE or SUS

For corrosive gas use (NACE Standard)

Parts name		N		P	
		REC	REB	REC	REB
Body		SCPH2 or A216 WCB	SCPH2 or A216 WCB	SCPH2 or A216 WCB	SCPH2 or A216 WCB
Bonnet		SCPH2 or A216 WCB	SCPH2 or A216 WCB	SCPH2 or A216 WCB	SCPH2 or A216 WCB
Cap		A105	A105	A105	A105
Nozzle		SUS316	SUS316	SUS316	SUS316
Disc		SUS316	SUS316	SUS316	SUS316
Disc holder		SUS316	SUS316	SUS316	SUS316L
Adjusting ring		SUS316-TP	SUS316-TP	SUS316-TP	SUS316-TP
Adj. ring lock bolt		SUS316	SUS316	SUS316	SUS316
Guide	Guide sleeve	SUS316-TP	SUS316-TP	SUS316-TP	SUS316
	Guide flange	SUS316	SUS316	SUS316	–
Spindle		SUS316	SUS403	SUS316	SUS316
Adjusting screw		SUS316	–	SUS316	–
Adj. screw lock nut		SUS316	–	SUS316	–
Spring washer		SUS316	SUS316	SUS316	SUS316
Spring		Spring steel + Aluminum spraying	Spring steel + Aluminum spraying or Inconel 750X eq.	Inconel 750X eq.	Spring steel + Aluminum spraying or Inconel 750X eq.
Stud bolt		A193 B8M CL1A	A193 B8M CL1A	A193 B8M CL1A	A193 B8M CL1A
Nut		A194-8MA	A194-8MA	A194-8MA	A194-8MA
Bellows		–	–	–	INCONEL 625
Bellows piece		–	–	–	–
Gasket(Cap)		Non asbestos	Non asbestos	Non asbestos	Non asbestos
Gasket(Bonnet)		Non asbestos	Non asbestos	Non asbestos	Non asbestos
Gasket(Body)		Non asbestos	Non asbestos	Non asbestos	Non asbestos
Gasket(Lock bolt)		Non asbestos	Non asbestos	Non asbestos	Non asbestos

1-3. Dimensions and weight (ASME flange)

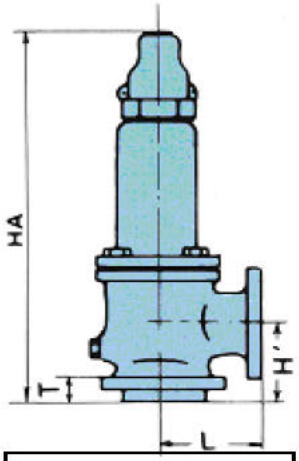

NON LEVER TYPE

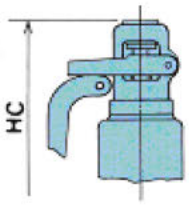

PLAIN LEVER TYPE

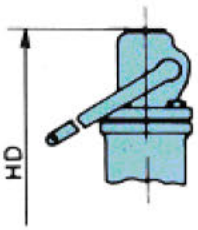

PACKED LEVER TYPE

Dimensions and weight

Unit: mm

Size	Style	Connection ASME flange		Center to face		Thickness of inlet flange	Height			Weight, kg		
										Cap code		
		Inlet	Outlet	Inlet H'	Outlet L	T	HA	HC	HD	A	C	D
3/4 D1	REC 161,171	150	150	92	96	30	320	315	365	9	10	10
3/4 D1	REC 261,271	300	150	92	96	30	320	315	365	9	10	10
3/4 D1	REC 361,371,381	300	150	92	96	30	320	315	365	9	10	10
1D2	REC & REB 161,171	150	150	105	114	32	335	330	375	11	12	13
1D2	REC & REB 261,271	300	150	105	114	32	335	330	375	11	12	13
1D2	REC & REB 361,371,381	300	150	105	114	32	335	330	375	11	12	13
1D2	REC & REB 461,471,481	600	150	105	114	32	345	345	390	13	14	15
1 1/2 D2	REC 561,571,581	900	300	105	140	50	425	430	475	20	21	22
1 1/2 D2	REC 661,671,681	1500	300	105	140	50	425	430	475	20	21	22
1 1/2 D3	REC 761,771,781	2500	300	140	178	63	530	525	575	23	25	26
1E2	REC & REB 161,171	150	150	105	114	32	335	330	375	11	12	13
1E2	REC & REB 261,271	300	150	105	114	32	335	330	375	12	13	14
1E2	REC & REB 361,371,381	300	150	105	114	32	335	330	375	12	13	14
1E2	REC & REB 461,471,481	600	150	105	114	32	345	345	390	14	15	16
1 1/2 E2	REC 561,571,581	900	300	105	140	50	425	430	475	20	21	22
1 1/2 E2	REC 661,671,681	1500	300	105	140	50	425	430	475	20	21	22
1 1/2 E3	REC 761,771,781	2500	300	140	178	63	530	525	575	23	25	26
1 1/2 F2	REC & REB 161,171	150	150	124	121	39	350	350	395	15	16	17
1 1/2 F2	REC & REB 261,271	300	150	124	121	39	350	350	395	15	16	17
1 1/2 F2	REC & REB 361,371,381	300	150	124	152	40	350	350	395	15	16	17
1 1/2 F2	REC & REB 461,471,481	600	150	124	152	41	365	360	410	17	18	19
1 1/2 F3	REC & REB 561,571,581	900	300	124	165	50	445	450	495	27	29	30
1 1/2 F3	REC & REB 661,671,681	1500	300	124	165	50	445	450	495	27	29	30
1 1/2 F3	REC & REB 761,771,781	2500	300	140	178	63	530	525	575	35	37	39
1 1/2 G3	REC & REB 161,171	150	150	124	121	39	375	375	420	17	18	19
1 1/2 G3	REC & REB 261,271	300	150	124	121	39	375	375	420	17	18	19
1 1/2 G3	REC & REB 361,371,381	300	150	124	152	40	405	400	450	19	20	21
1 1/2 G3	REC & REB 461,471,481	600	150	124	152	41	405	400	450	21	23	24
1 1/2 G3	REC & REB 561,571,581	900	300	124	165	50	455	455	500	29	31	32
2G3	REC & REB 661,671,681	1500	300	156	171	57	555	550	600	37	37	41
2G3	REC & REB 761,771,781	2500	300	156	171	69	555	550	600	42	45	47

1-3. Dimensions and weight (ASME flange)

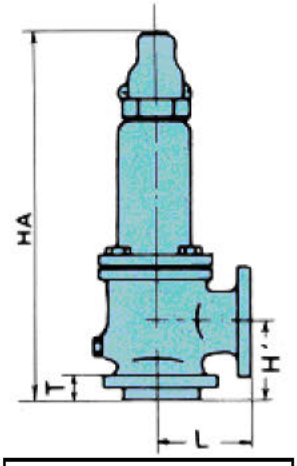

NON LEVER TYPE

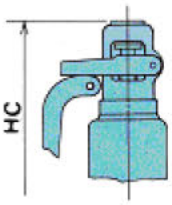

PLAIN LEVER TYPE

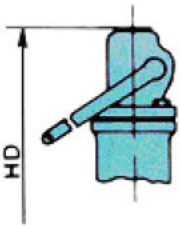

PACKED LEVER TYPE

Dimensions and weight

Unit: mm

Size	Style	Connection ASME flange		Center to face		Thickness of Inlet flange	Height			Weight, kg		
										Cap code		
		Inlet	Outlet	Inlet H'	Outlet L	T	HA	HC	HD	A	C	D
1 1/2 H3	REC & REB 161,171	150	150	130	124	39	425	420	465	17	18	19
1 1/2 H3	REC & REB 261,271	300	150	130	124	39	425	420	465	20	21	22
2H3	REC & REB 361,371	300	150	130	124	41	460	460	505	22	24	25
2H3	REC & REB 461,471	600	150	154	162	44	485	485	530	25	27	28
2H3	REC & REB 381	300	150	130	124	44	460	460	505	22	24	25
2H3	REC & REB 481	600	150	130	124	44	460	460	505	22	24	25
2H3	REC & REB 561,571,581	900	150	154	162	57	550	545	595	42	45	47
2H3	REC & REB 661,671,681	1500	300	154	162	57	550	545	595	45	48	50
2J3	REC & REB 161,171	150	150	137	124	41	475	475	520	23	25	26
2J3	REC & REB 261,271	300	150	137	124	41	475	475	520	24	26	27
3J4	REC & REB 361,371	300	150	184	181	47	590	585	635	44	47	49
3J4	REC & REB 461,471	600	150	184	181	50	590	585	635	50	53	55
3J4	REC & REB 381	300	150	184	181	50	590	585	635	45	48	50
3J4	REC & REB 481	600	150	184	181	50	590	585	635	45	48	50
3J4	REC & REB 561,571	900	150	184	181	57	630	625	670	59	62	65
3J4	REC & REB 581	900	150	184	181	60	630	625	670	60	63	66
3J4	REC & REB 661,671,681	1500	300	184	181	66	630	625	670	77	81	85
3K4	REC & REB 161,171	150	150	156	162	47	570	565	615	41	44	46
3K4	REC & REB 261,271	300	150	156	162	47	570	565	615	43	46	48
3K4	REC & REB 361,371	300	150	156	162	47	605	600	650	47	50	52
3K4	REC & REB 461,471	600	150	184	181	50	635	630	680	57	60	63
3K4	REC & REB 381	300	150	156	162	50	605	600	650	47	50	52
3K4	REC & REB 481	600	150	156	162	50	605	600	650	47	50	52
3K6	REC & REB 561,571	900	150	198	216	57	690	685	735	80	84	88
3K6	REC & REB 581	900	150	184	181	57	635	630	680	70	74	77
3K6	REC & REB 661,671,681	1500	300	197	216	66	690	685	735	95	100	105
3L4	REC & REB 161,171	150	150	156	165	47	620	615	665	52	55	58
3L4	REC & REB 261,271	300	150	156	165	47	620	615	665	54	57	60
4L6	REC & REB 361,371,381	300	150	179	181	50	685	680	730	72	76	80
4L6	REC & REB 461,471	600	150	179	203	56.5	685	680	730	77	81	85
4L6	REC & REB 481	600	150	181	203	57	685	680	730	77	81	85
4L6	REC & REB 561,571,581	900	150	197	222	63	820	815	885	108	114	119
4L6	REC & REB 671,681	1500	150	197	222	72	820	815	885	117	123	129

1-3. Dimensions and weight (ASME flange)

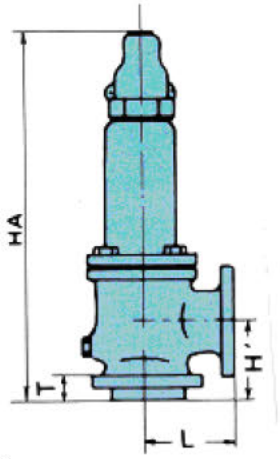

NON LEVER TYPE

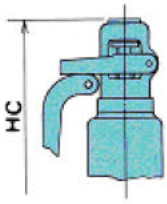

PLAIN LEVER TYPE

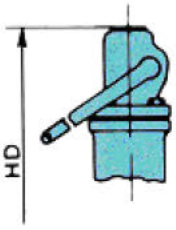

PACKED LEVER TYPE

Dimensions and weight

Unit: mm

Size	Style	Connection ASME flange		Center to face		Thickness of inlet flange	Height			Weight, kg		
										Cap code		
		Inlet	Outlet	Inlet H'	Outlet L	T	HA	HC	HD	A	C	D
4M6	REC & REB 161,171	150	150	178	184	50	645	640	685	58	61	64
4M6	REC & REB 261,271	300	150	178	184	50	645	640	685	72	76	80
4M6	REC & REB 361,371,381	300	150	178	184	50	760	755	820	90	95	99
4M6	REC & REB 461,471,481	600	150	178	203	56.5	820	815	880	111	117	123
4M6	REC & REB 571,581	900	150	197	222	63	835	830	900	121	128	134
4N6	REC & REB 161,171	150	150	197	210	50	710	705	755	76	80	84
4N6	REC & REB 261,271	300	150	197	210	50	710	705	755	81	86	90
4N6	REC & REB 361,371,381	300	150	197	210	50	840	835	905	105	111	116
4N6	REC & REB 461,471,481	600	150	197	222	56.5	840	835	905	113	119	125
4N6	REC & REB 571,581	900	150	197	222	63	840	835	905	125	132	138
4P6	REC & REB 161,171	150	150	181	229	50	850	845	915	83	88	92
4P6	REC & REB 261,271	300	150	181	229	50	850	845	915	105	111	116
4P6	REC & REB 361,371,381	300	150	225	254	50	945	940	1010	140	147	154
4P6	REC & REB 461,471,481	600	150	225	254	56.5	945	940	1010	142	150	157
4P6	REC & REB 571,581	900	150	225	254	63	945	940	1010	162	171	179
6Q8	REC & REB 161,171	150	150	240	241	44	990	985	1050	160	168	176
6Q8	REC & REB 261,271	300	150	240	241	55	990	985	1050	170	179	187
6Q8	REC & REB 361,371,381	300	150	240	241	56	1075	1070	1155	196	206	216
6Q8	REC & REB 461,471,481	600	150	240	241	66	1075	1070	1155	253	266	279
6R8	REC & REB 161,171	150	150	240	241	44	990	985	1055	220	231	242
6R8	REC & REB 261,271,281	300	150	240	241	56	990	985	1055	230	242	253
6R10	REC & REB 361,371	300	150	240	267	56	1080	1075	1155	250	263	275
6R10	REC & REB 461,471,481	600	150	240	267	66	1095	1090	1175	260	273	286
8T10	REC & REB 161,171	150	150	276	279	48	1085	1080	1165	245	258	270
8T10	REC & REB 261,271	300	150	276	279	60	1085	1080	1165	300	315	330
8T10	REC & REB 361,371,381	300	150	276	279	60	1140	1135	1220	300	315	330
8T10	REC & REB 461-3,471-3,481-3	300	150	276	279	60	1270	1265	1350	320	336	352

1-4. Dimensions and weight (JIS flange)

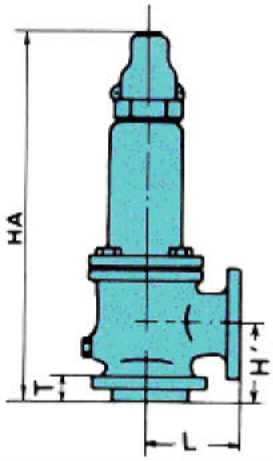

NON LEVER TYPE

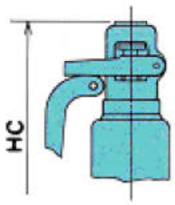

PLAIN LEVER TYPE

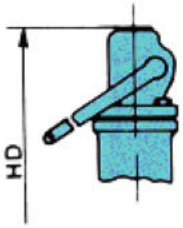

PACKED LEVER TYPE

Dimensions and weight

Unit: mm

Size	Style	Connection ASME flange		Center to face		Thickness of inlet flange	Height			Weight, kg		
										Cap code		
		Inlet	Outlet	Inlet H'	Outlet L	T	HA	HC	HD	A	C	D
20D25	REC 164,174	10	10	92	96	30	320	315	365	9	10	10
20D25	REC 264,274	20	10	92	96	30	320	315	365	9	10	10
20D25	REC 364,374,384,394	30	10	92	96	30	320	315	365	9	10	10
25D50	REC & REB 164,174	10	10	105	114	32	335	330	375	11	12	13
25D50	REC & REB 264,274	20	10	105	114	32	335	330	375	11	12	13
25D50	REC& REB 364,374,384,394	30	10	105	114	32	335	330	375	11	12	13
25E50	REC & REB 164,174	10	10	105	114	32	335	330	375	11	12	13
25E50	REC & REB 264,274	20	10	105	114	32	335	330	375	12	13	14
25E50	REC& REB 364,374,384,394	30	10	105	114	32	335	330	375	12	13	14
40F50	REC & REB 164,174	10	10	124	121	39	350	345	395	15	16	17
40F50	REC & REB 264,274	20	10	124	121	39	350	345	395	15	16	17
40F50	REC& REB 364,374,384,394	30	10	124	152	40	350	345	395	15	16	17
40G80	REC & REB 164,174	10	10	124	121	39	375	375	420	17	18	19
40G80	REC & REB 264,274	20	10	124	121	39	375	375	420	17	18	19
40G80	REC& REB 364,374,384,394	30	10	124	152	40	405	400	450	19	20	21
40H80	REC & REB 164,174	10	10	130	124	39	425	420	465	17	18	19
40H80	REC & REB 264,274	20	10	130	124	39	425	420	465	20	21	22
50H80	REC & REB 364,374(384,394)	30	10	130	124	41	460	460	505	22	24	25
50H80	REC & REB 384,394	30	10	130	124	44	460	460	505	22	24	25
50J80	REC & REB 164,174	10	10	137	124	41	475	475	520	23	25	26
50J80	REC & REB 264,274	20	10	137	124	41	475	475	520	24	26	27
80J100	REC & REB 364,374(384,394)	30	10	184	181	47	590	585	635	44	47	49
80J100	REC & REB 384,394	30	10	184	181	50	590	585	635	45	48	50
80K100	REC & REB 164,174	10	10	156	162	47	570	565	615	41	44	46
80K100	REC & REB 264,274	20	10	156	162	47	570	565	615	43	46	48
80K100	REC & REB 364,374(384,394)	30	10	156	162	47	605	600	650	47	50	52
80K100	REC & REB 384,394	30	10	156	162	50	605	6000	650	47	50	52
80L100	REC & REB 164,174	10	10	156	165	47	620	615	665	52	55	58
80L100	REC & REB 264,274	20	10	156	165	47	620	615	665	54	57	60
100L150	REC& REB 364,374,384,394	30	10	179	181	50	685	680	730	72	76	80

1-4. Dimensions and weight (JIS flange)

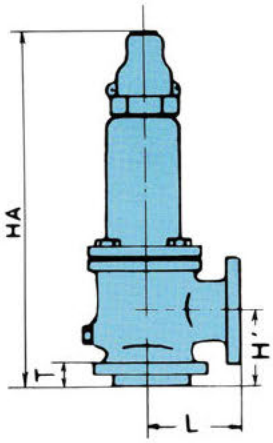

NON LEVER TYPE

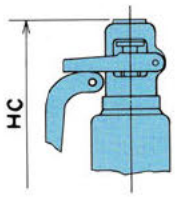

PLAIN LEVER TYPE

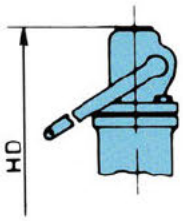

PACKED LEVER TYPE

Dimensions and weight

Unit:mm

Size	Style	Connection ASME flange		Center to face		Thickness of inlet flange	Height			Weight, kg		
										Cap code		
		Inlet	Outlet	Inlet H'	Outlet L	T	HA	HC	HD	A	C	D
100M150	REC & REB 164,174	10	10	178	184	50	645	640	685	58	61	64
100M150	REC & REB 264,274	20	10	178	184	50	645	640	685	72	76	80
100M150	REC & REB 364,374,384,394	30	10	178	184	50	760	755	820	90	95	99
100N150	REC & REB 164,174	10	10	197	210	50	710	705	755	76	80	84
100N150	REC & REB 264,274	20	10	197	210	50	710	705	755	81	86	90
100N150	REC & REB 364,374,384,394	30	10	197	210	50	840	835	905	105	111	116
100P150	REC & REB 164,174	10	10	181	229	50	850	845	915	83	88	92
100P150	REC & REB 264,274	20	10	181	229	50	850	845	915	105	111	116
100P150	REC & REB 364,374,384,394	30	10	225	254	50	945	940	1010	140	147	154
150Q200	REC & REB 164,174	10	10	240	241	44	990	985	1050	160	168	176
150Q200	REC & REB 264,274	20	10	240	241	55	990	985	1050	170	179	187
150Q200	REC & REB 364,374,384,394	30	10	240	241	56	1075	1070	1155	196	206	216
150R200	REC & REB 164,174	10	10	240	241	44	990	985	1055	220	231	242
150R200	REC & REB 264,274	20	10	240	241	56	990	985	1055	230	242	253
150R250	REC & REB 364,274,384,394	30	10	240	267	56	1080	1075	1155	250	263	275
200T250	REC & REB 164,174	10	10	276	279	48	1085	1080	1165	245	267	280
200T250	REC & REB 264,274	20	10	276	279	48	1085	1080	1165	300	315	330
200T250	REC & REB 364,274,384,394	30	10	276	279	60	1140	1135	1220	300	315	330
200T250	REC& REB464-3,474-3,484-3,494-3	30	10	276	279	60	1270	1265	1350	320	336	352

1-5. Orifice effective area of safety valve

■ The effective area each of the orifices used in the RE series is as follows:
The units of area are mm^2 for the upper field and in^2 for the lower of the tables, respectively.

Orifice symbol	D	E	F	G
Throat area	88.2	181.5	243.3	383.6
	0.1368	0.2812	0.3772	0.5945
API area	71.0	126.5	198.1	324.5
	0.110	0.196	0.307	0.503

Orifice symbol	H	J	K	L
Throat area	594.0	962.1	1372.3	2140.1
	0.9212	1.491	2.128	3.317
API area	506.5	830.3	1185.8	1840.6
	0.785	1.287	1.838	2.853

Orifice symbol	M	N	P	Q
Throat area	2687.8	3267.5	4778.4	8413.4
	4.165	5.063	7.407	13.042
API area	2322.6	2800.0	4116.1	7129.0
	3.60	4.34	6.38	11.05

Orifice symbol	R	T
Throat area	11940.3	18869.2
	18.505	29.244
API area	10322.6	16774.2
	16.00	26.00

Actual area: Is our original and applied when using the measured nominal coefficient of discharge.

API area: Effective area of orifice specified in the API Standard 526.

Using an actual area of orifice to determine the relieving capacity of valve is allowed under API 520 Part 1, section 5.2.4.

1-6. Cap structure code

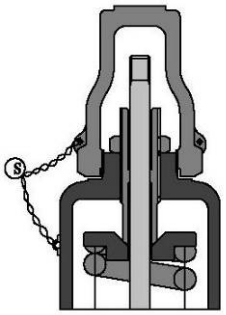

● **Type A**

（Screwed cap）

Standard type

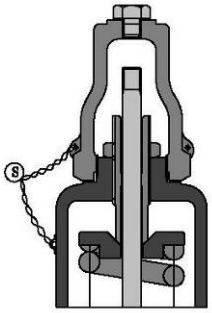

● **Type B**

（Screwed cap with test gag）

A test gag is convenient in performing a hydrostatic pressure test or a blowout test. The gag should be finger tight. When the test is complete, be sure to replace it with a plug. Failure to do so may cause the safety valve not to operate, creating a dangerous situation.

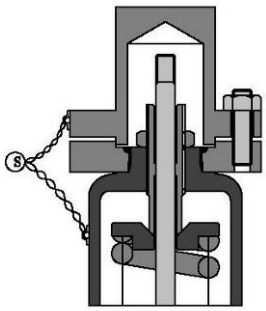

● **Type G**

（Bolted cap）

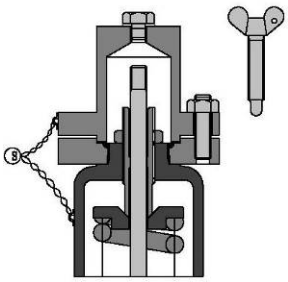

● **Type H**

(with bolted cap and test gag）

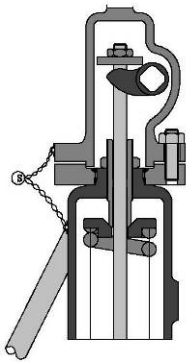

● **Type D**（Packed lever）

This type needs a test lever and is used when gastightness is required at the exhaust side.

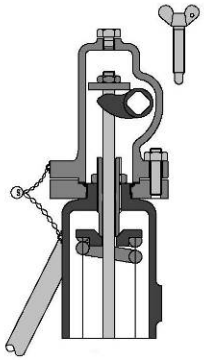

● **Type E**

（Packed lever with test gag）

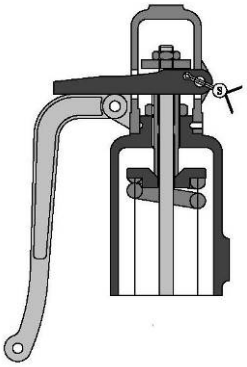

● **Type C**（Plain lever）

Is used when a periodic check of safety valve operation is required and also a fluid (such as steam or air) may be discharged into the atmosphere.

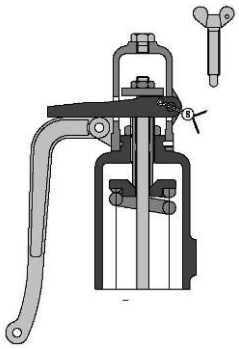

● **Type T**

（Plain lever with test gag）

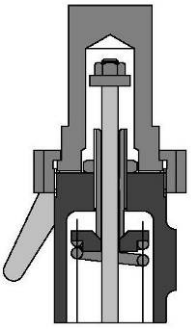

● **Type M**（Packed lever）

This type needs a test lever and is used when gastightness is required at the exhaust side.

Type D is of a gland packing type whereas Type M is of an O-ring seal type.

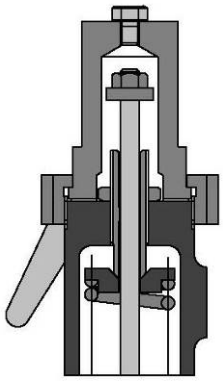

● **Type N**（Packed lever）

A version of Type M with test gag

1-7. API pressure vs. temperature standard for orifice D (88.2mm²)

D Oriffice		Class	Size	Flange Rating		Maximum Set Pressure MPa					
						Temperature℃					
Body & Bonnet				Inlet	Outlet	−196 to −60	−60 to −29	−29 to 38	232	427	538
Carbon Steel	SCPH2, WCB SCPL1, LCB	1	1xDx2	150LB	150LB			1.96	1.27	0.55	
		2	1xDx2	300LB	150LB			1.96	1.96	1.96	
		3	1xDx2	300LB	150LB			5.1	4.24	2.82	
		4	1xDx2	600LB	150LB			10.2	8.51	5.68	
		5	1.1/2xDx2	900LB	300LB			15.3	12.72	8.51	
		6	1.1/2xDx2	1500LB	300LB			25.54	21.23	14.2	
		7	1.1/2xDx3	2500LB	300LB			41.36	35.4	23.64	
Cr-Mo Steel	SCPH21, WC6 SCPH32, WC9 SCPH61, C5	3	1xDx2	300LB	150LB					3.51	1.48
		4	1xDx2	600LB	150LB					6.99	2.96
		5	1.1/2xDx2	900LB	300LB					10.51	4.48
		6	1.1/2xDx2	1500LB	300LB					17.51	7.44
		7	1.1/2xDx3	2500LB	300LB					29.16	12.41
Stainless Steel	SCS13, CF8 SCS14, CF8M SCS19, CF3 SCS16, CF3M SCS21, CF8C	1	1xDx2	150LB	150LB	1.89	1.89	1.89	1.24	0.55	0.13
		2	1xDx2	300LB	150LB	1.89	1.89	1.89	1.89	1.89	1.89
		3	1xDx2	300LB	150LB	4.96	4.96	4.96	3.41	2.89	2.41
		4	1xDx2	600LB	150LB	9.92	9.92	9.92	6.82	5.82	4.82
		5	1.1/2xDx2	900LB	300LB	14.89	14.89	14.89	10.23	8.72	7.23
		6	1.1/2xDx2	1500LB	300LB	24.82	24.82	24.82	17.09	14.54	12.06
		7	1.1/2xDx3	2500LB	300LB	27.57	27.57	41.36	28.47	24.26	20.09

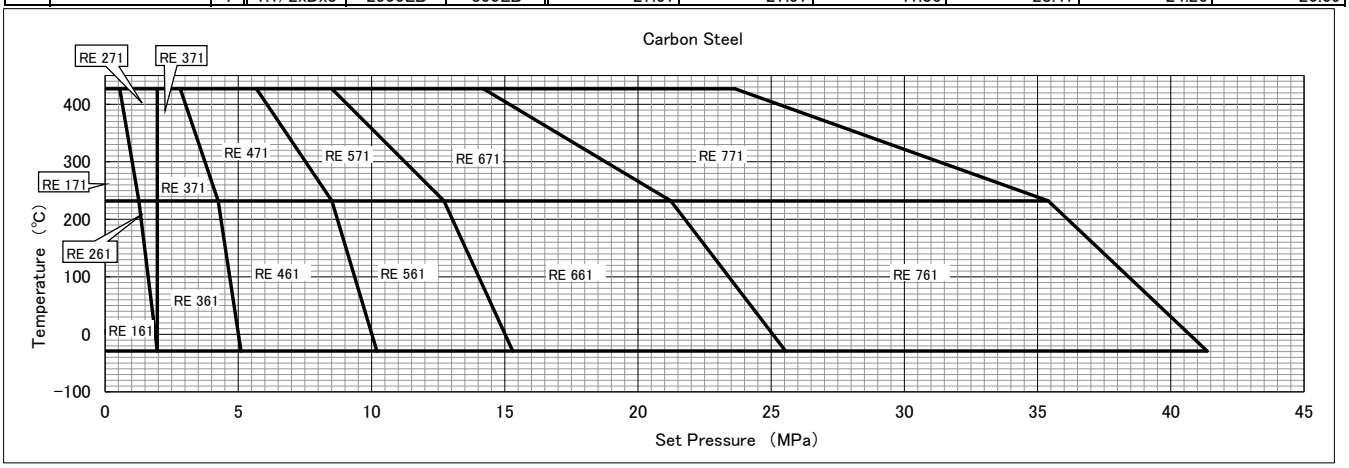

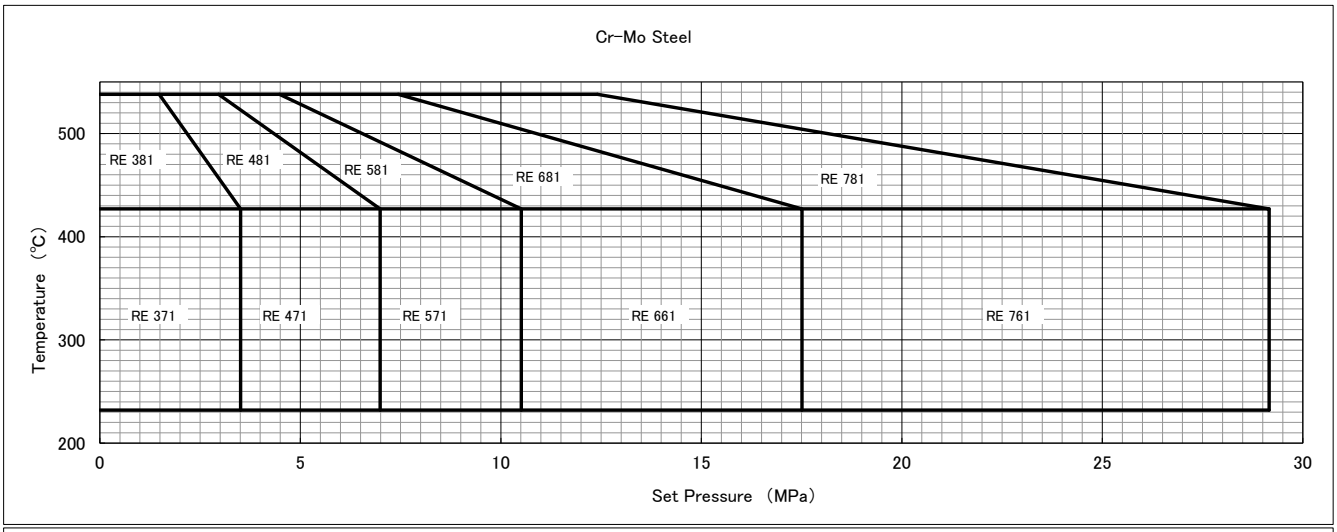

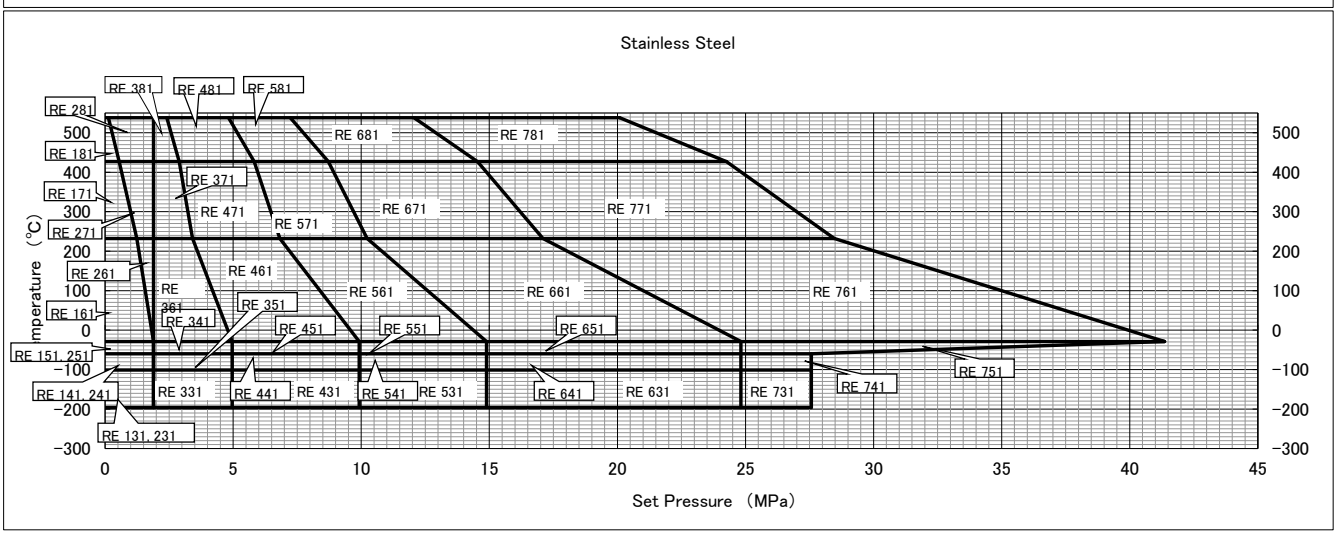

1-7. API pressure vs. temperature standard for orifice E (181.5mm²)

E Oriffice		Class	Size	Flange Rating		Maximum Set Pressure MPa					
						Temperature℃					
Body & Bonnet				Inlet	Outlet	−196 to −60	−60 to −29	−29 to 38	232	427	538
Carbon Steel	SCPH2, WCB SCPL1, LCB	1	1xEx2	150LB	150LB			1.96	1.27	0.55	
		2	1xEx2	300LB	150LB			1.96	1.96	1.96	0
		3	1xEx2	300LB	150LB			5.1	4.24	2.82	
		4	1xEx2	600LB	150LB			10.2	8.51	5.68	0
		5	1.1/2xEx2	900LB	300LB			15.3	12.72	8.51	
		6	1.1/2xEx2	1500LB	300LB			25.54	21.23	14.2	0
		7	1.1/2xEx3	2500LB	300LB			41.36	35.4	23.64	
Cr-Mo Steel	SCPH21, WC6 SCPH32, WC9 SCPH61, C5	3	1xEx2	300LB	150LB					3.51	1.48
		4	1xEx2	600LB	150LB					6.99	2.96
		5	1.1/2xEx2	900LB	300LB					10.51	4.48
		6	1.1/2xEx2	1500LB	300LB					17.51	7.44
		7	1.1/2xEx3	2500LB	300LB					29.16	12.41
Stainless Steel	SCS13, CF8 SCS14, CF8M SCS19, CF3 SCS16, CF3M SCS21, CF8C	1	1xEx2	150LB	150LB	1.89	1.89	1.89	1.24	0.55	0.13
		2	1xEx2	300LB	150LB	1.89	1.89	1.89	1.89	1.89	1.89
		3	1xEx2	300LB	150LB	4.96	4.96	4.96	3.41	2.89	2.41
		4	1xEx2	600LB	150LB	9.92	9.92	9.92	6.72	5.82	4.82
		5	1.1/2xEx2	900LB	300LB	14.89	14.89	14.89	10.23	8.72	7.23
		6	1.1/2xEx2	1500LB	300LB	24.82	24.82	24.82	17.09	14.54	12.06
		7	1.1/2xEx3	2500LB	300LB	27.57	27.57	41.36	28.47	24.26	20.09

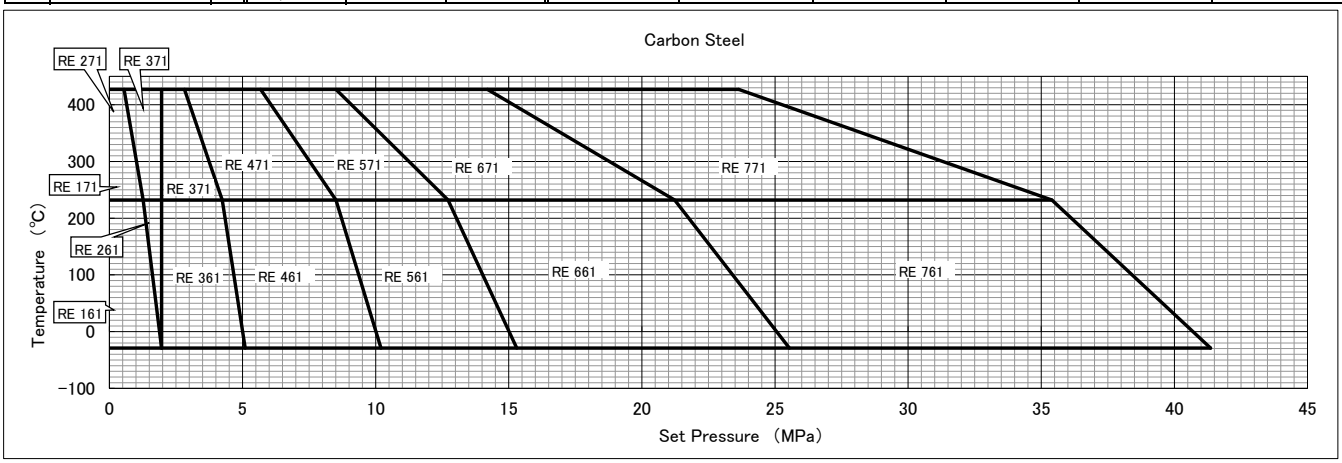

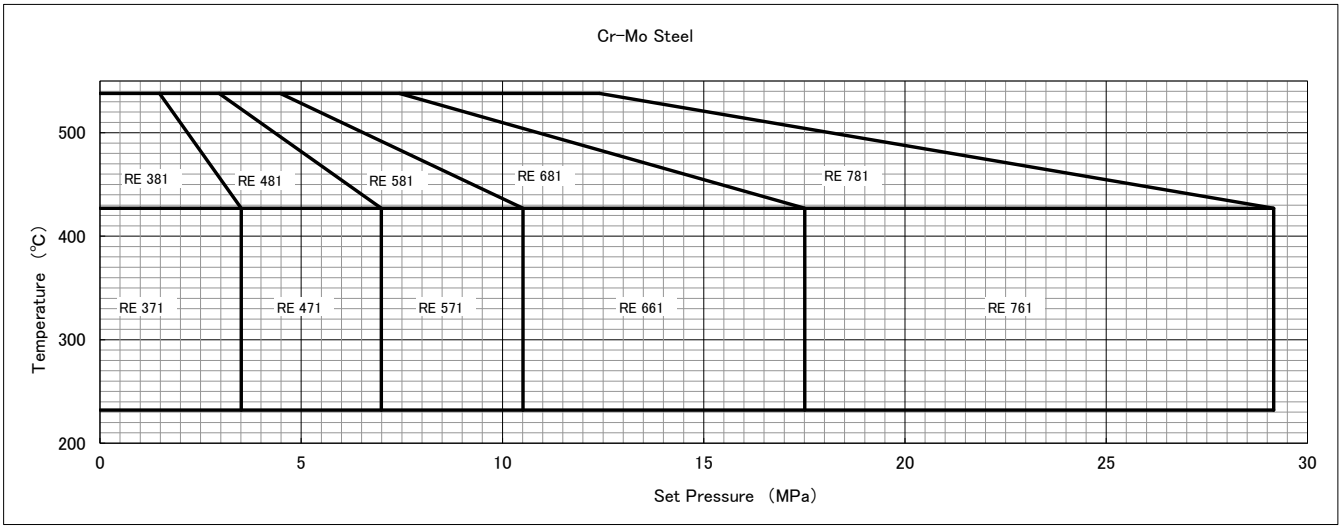

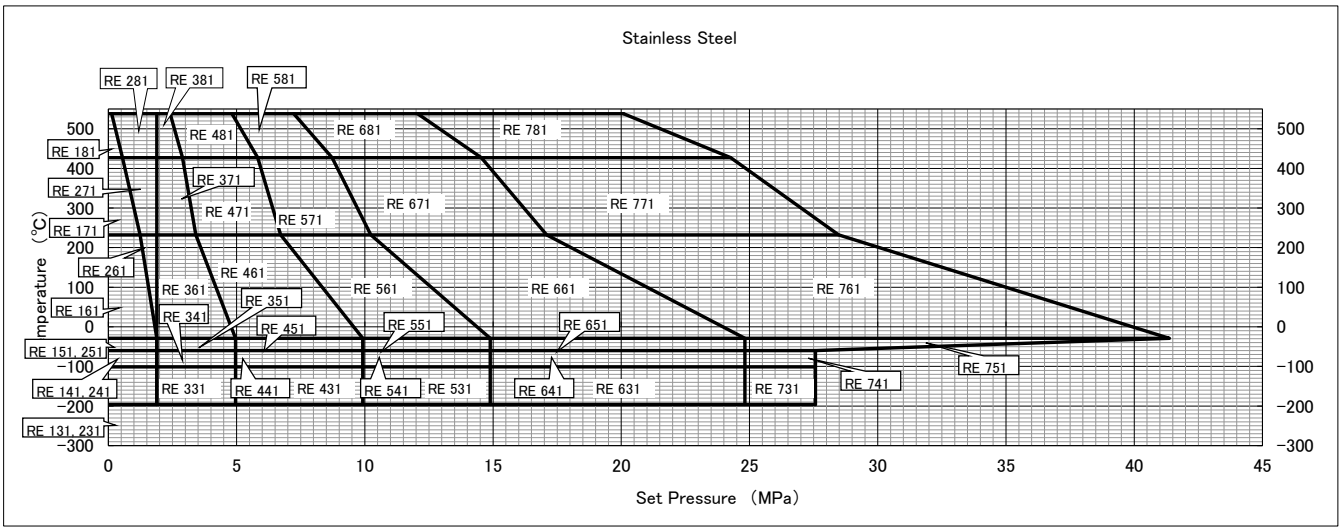

1-7. API pressure vs. temperature standard for orifice F (243.3mm²)

F Oriffice		Class	Size	Flange Rating		Maximum Set Pressure MPa					
						Temperature℃					
Body & Bonnet				Inlet	Outlet	−196 to −60	−60 to −29	−29 to 38	232	427	538
Carbon Steel	SCPH2, WCB SCPL1, LCB	1	1.1/2xFx2	150LB	150LB			1.96	1.27	0.55	
		2	1.1/2xFx2	300LB	150LB			1.96	1.96	1.96	0
		3	1.1/2xFx2	300LB	150LB			5.1	4.24	2.82	
		4	1.1/2xFx2	600LB	150LB			10.2	8.51	5.68	0
		5	1.1/2xFx3	900LB	300LB			15.3	12.72	8.51	
		6	1.1/2xFx3	1500LB	300LB			25.54	21.23	14.2	0
		7	1.1/2xFx3	2500LB	300LB			34.47	34.47	23.64	
Cr-Mo Steel	SCPH21, WC6 SCPH32, WC9 SCPH61, C5	3	1.1/2xFx2	300LB	150LB					3.51	1.48
		4	1.1/2xFx2	600LB	150LB					6.99	2.96
		5	1.1/2xFx3	900LB	300LB					10.51	4.48
		6	1.1/2xFx3	1500LB	300LB					17.51	7.44
		7	1.1/2xFx3	2500LB	300LB					29.16	12.41
Stainless Steel	SCS13, CF8 SCS14, CF8M SCS19, CF3 SCS16, CF3M SCS21, CF8C	1	1.1/2xFx2	150LB	150LB	1.89	1.89	1.89	1.24	0.55	0.13
		2	1.1/2xFx2	300LB	150LB	1.89	1.89	1.89	1.89	1.89	1.89
		3	1.1/2xFx2	300LB	150LB	4.96	4.96	4.96	3.41	2.89	2.41
		4	1.1/2xFx2	600LB	150LB	9.92	9.92	9.92	6.72	5.82	4.82
		5	1.1/2xFx3	900LB	300LB	14.89	14.89	14.89	10.23	8.72	7.23
		6	1.1/2xFx3	1500LB	300LB	15.16	15.16	24.82	17.09	14.54	12.06
		7	1.1/2xFx3	2500LB	300LB	23.44	23.44	34.47	28.47	24.26	20.09

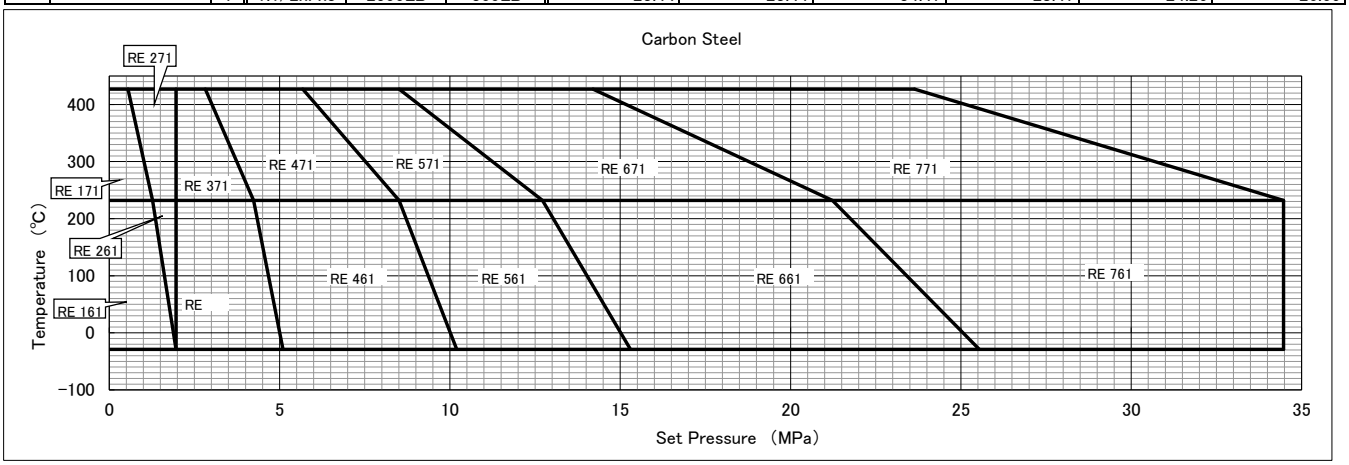

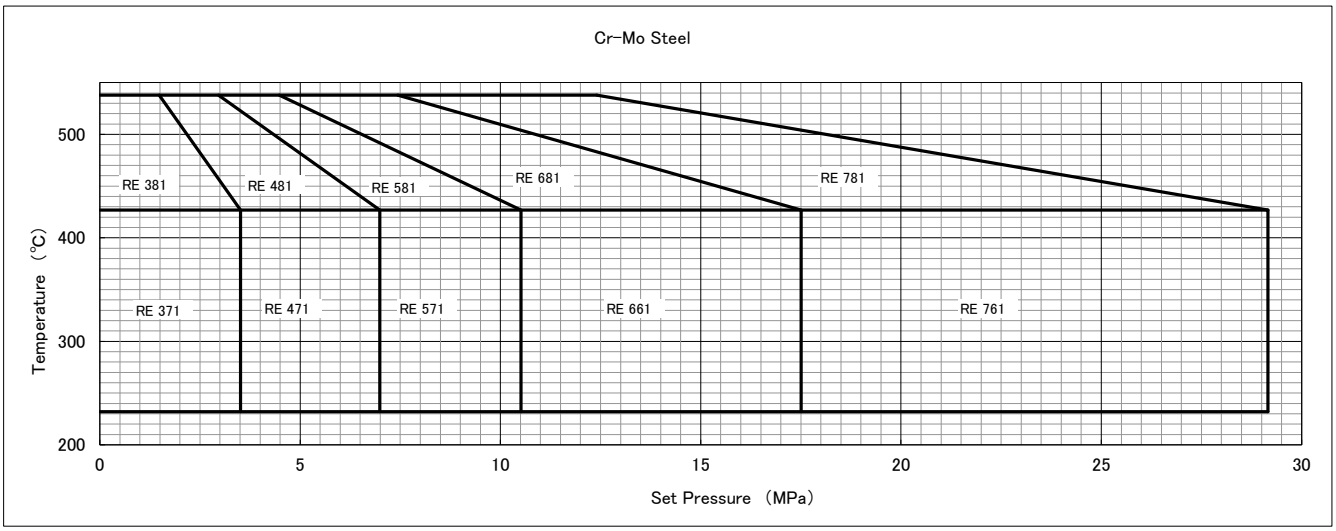

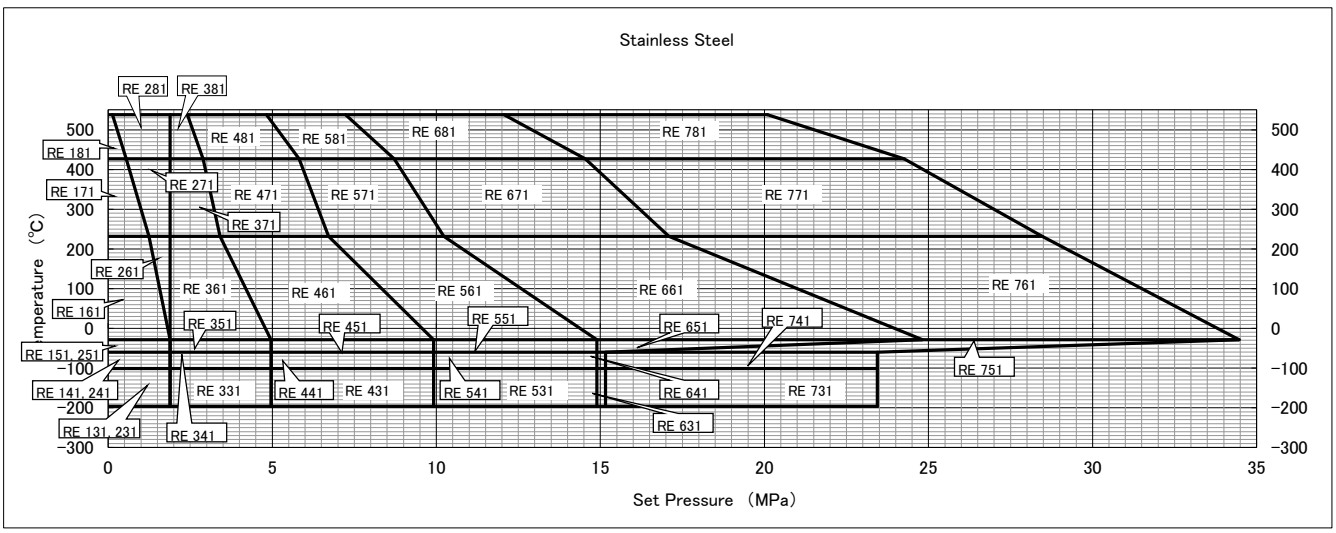

1-7. API pressure vs. temperature standard for orifice G (383.6mm²)

G Oriffice		Class	Size	Flange Rating		Maximum Set Pressure MPa					
						Temperature℃					
Body & Bonnet				Inlet	Outlet	−196 to −60	−60 to −29	−29 to 38	232	427	538
Carbon Steel	SCPH2, WCB SCPL1, LCB	1	1.1/2xGx3	150LB	150LB			1.96	1.27	0.55	
		2	1.1/2xGx3	300LB	150LB			1.96	1.96	1.96	
		3	1.1/2xGx3	300LB	150LB			5.1	4.24	2.82	
		4	1.1/2xGx3	600LB	150LB			10.2	8.51	5.68	
		5	1.1/2xGx3	900LB	300LB			15.3	12.72	8.51	
		6	2xGx3	1500LB	300LB			25.54	21.23	14.2	
		7	2xGx3	2500LB	300LB			25.54	25.54	23.64	
Cr-Mo Steel	SCPH21, WC6 SCPH32, WC9 SCPH61, C5	3	1.1/2xGx3	300LB	150LB					3.51	1.48
		4	1.1/2xGx3	600LB	150LB					6.99	2.96
		5	1.1/2xGx3	900LB	300LB					10.51	4.48
		6	2xGx3	1500LB	300LB					17.51	7.44
		7	2xGx3	2500LB	300LB					25.54	12.41
Stainless Steel	SCS13, CF8 SCS14, CF8M SCS19, CF3 SCS16, CF3M SCS21, CF8C	1	1.1/2xGx3	150LB	150LB	1.89	1.89	1.89	1.24	0.55	0.13
		2	1.1/2xGx3	300LB	150LB	1.89	1.89	1.89	1.89	1.89	1.89
		3	1.1/2xGx3	300LB	150LB	4.96	4.96	4.96	3.41	2.89	2.41
		4	1.1/2xGx3	600LB	150LB	9.92	9.92	9.92	6.72	5.82	4.82
		5	1.1/2xGx3	900LB	300LB	14.89	14.89	14.89	10.23	8.72	7.23
		6	2xGx3	1500LB	300LB	16.89	16.89	24.82	17.09	14.54	12.06
		7	2xGx3	2500LB	300LB	17.92	17.92	25.54	25.54	24.26	20.09

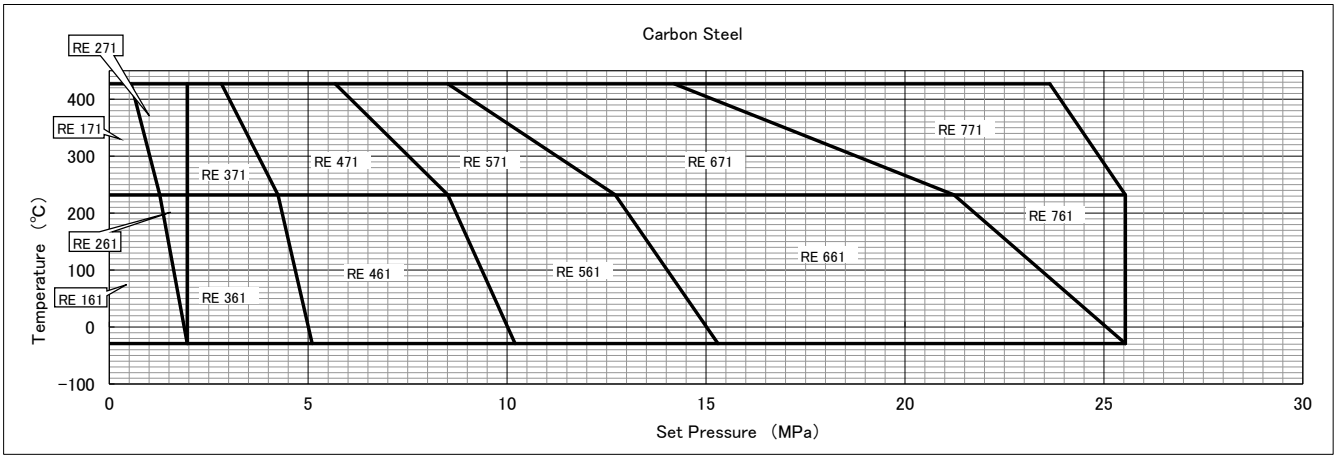

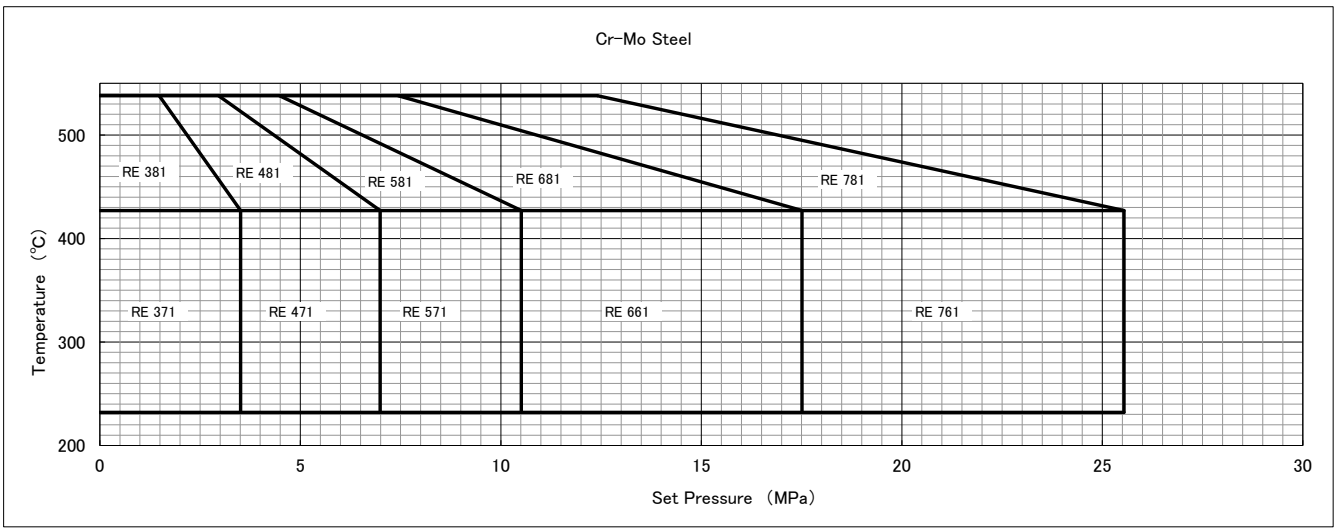

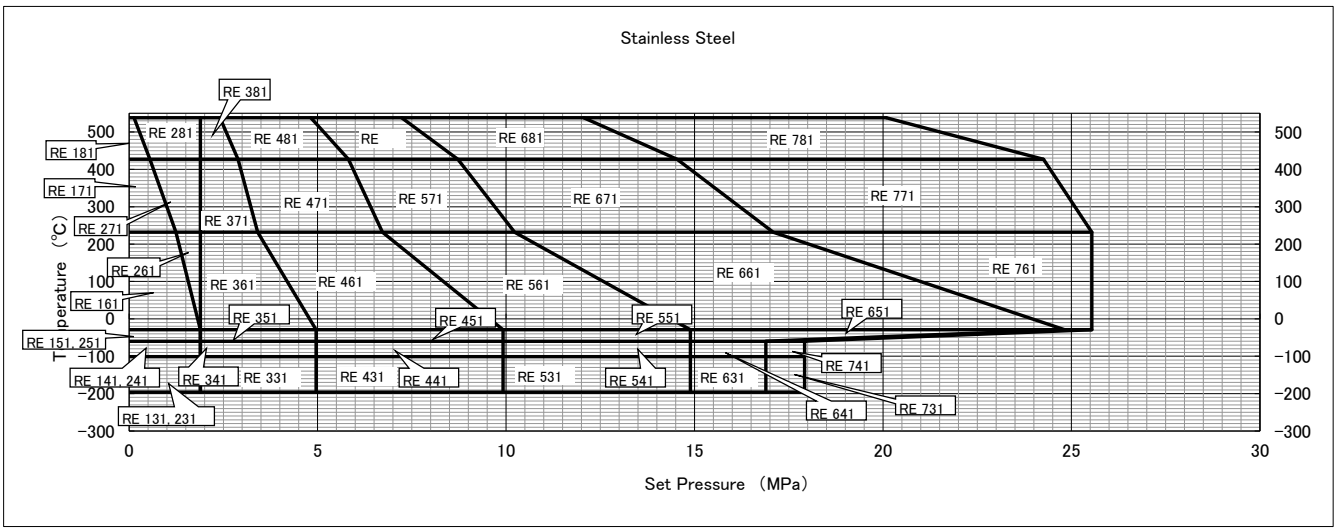

1-7. API pressure vs. temperature standard for orifice H (594.0mm²)

H Oriffice		Class	Size	Flange Rating		Maximum Set Pressure MPa					
						Temperature℃					
Body & Bonnet				Inlet	Outlet	-196 to -60	-60 to -29	-29 to 38	232	427	538
Carbon Steel	SCPH2, WCB SCPL1, LCB	1	1.1/2xHx3	150LB	150LB			1.96	1.27	0.55	
		2	1.1/2xHx3	300LB	150LB			1.96	1.96	1.96	
		3	2xHx3	300LB	150LB			5.1	4.24	2.82	
		4	2xHx3	600LB	150LB			10.2	8.51	5.68	
		5	2xHx3	900LB	150LB			15.3	12.72	8.51	
		6	2xHx3	1500LB	300LB			18.96	18.96	14.2	
Cr-Mo Steel	SCPH21, WC6 SCPH32, WC9 SCPH61, C5	3	2xHx3	300LB	150LB					3.51	1.48
		4	2xHx3	600LB	150LB					6.99	2.96
		5	2xHx3	900LB	150LB					10.51	4.48
		6	2xHx3	1500LB	300LB					17.51	7.44
Stainless Steel	SCS13, CF8 SCS14, CF8M SCS19, CF3 SCS16, CF3M SCS21, CF8C	1	1.1/2xHx3	150LB	150LB	1.89	1.89	1.89	1.24	0.55	0.13
		2	1.1/2xHx3	300LB	150LB	1.89	1.89	1.89	1.89	1.89	1.89
		3	2xHx3	300LB	150LB	4.96	4.96	4.96	3.41	2.89	2.41
		4	2xHx3	600LB	150LB	9.92	9.92	9.92	6.72	5.82	4.82
		5	2xHx3	900LB	150LB	10.23	10.23	14.89	10.23	8.72	7.23
		6	2xHx3	1500LB	300LB	11.03	11.03	18.96	17.09	14.54	12.06

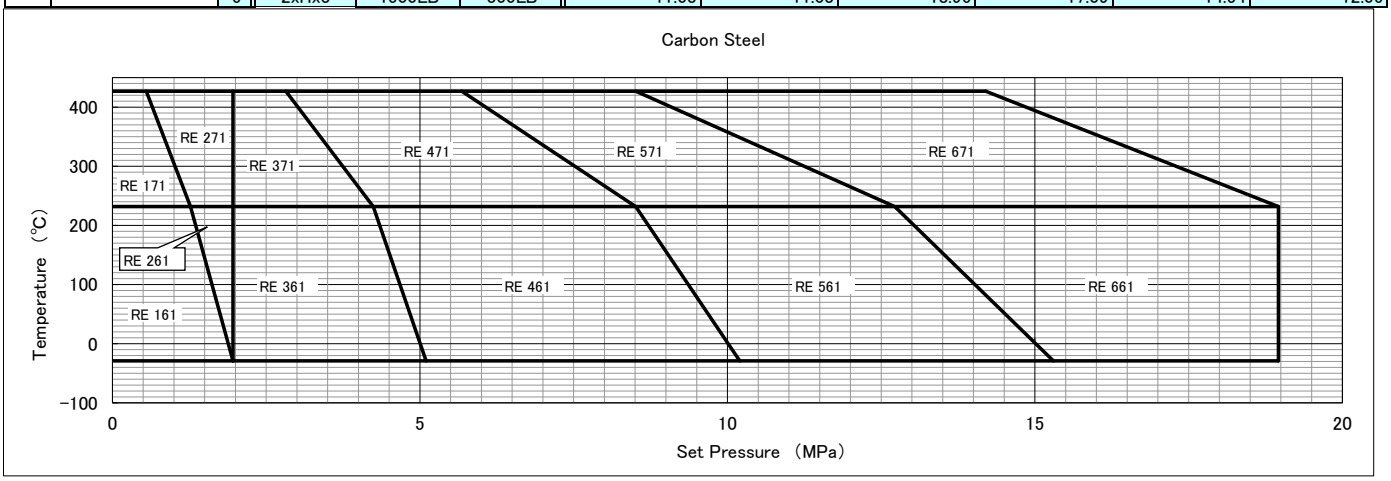

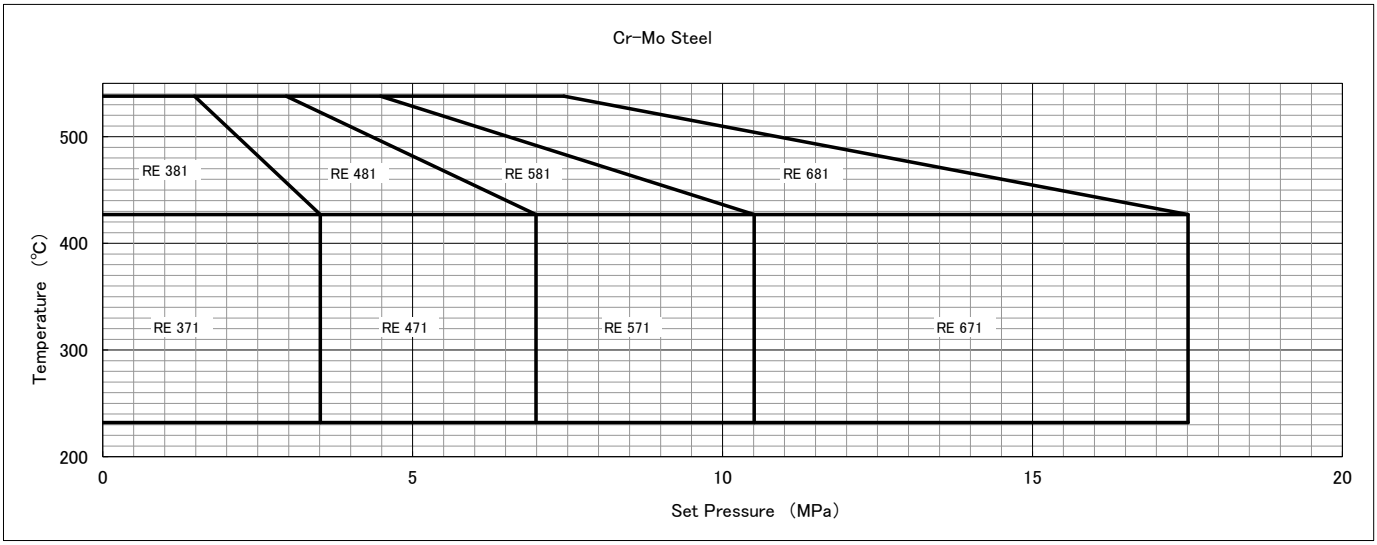

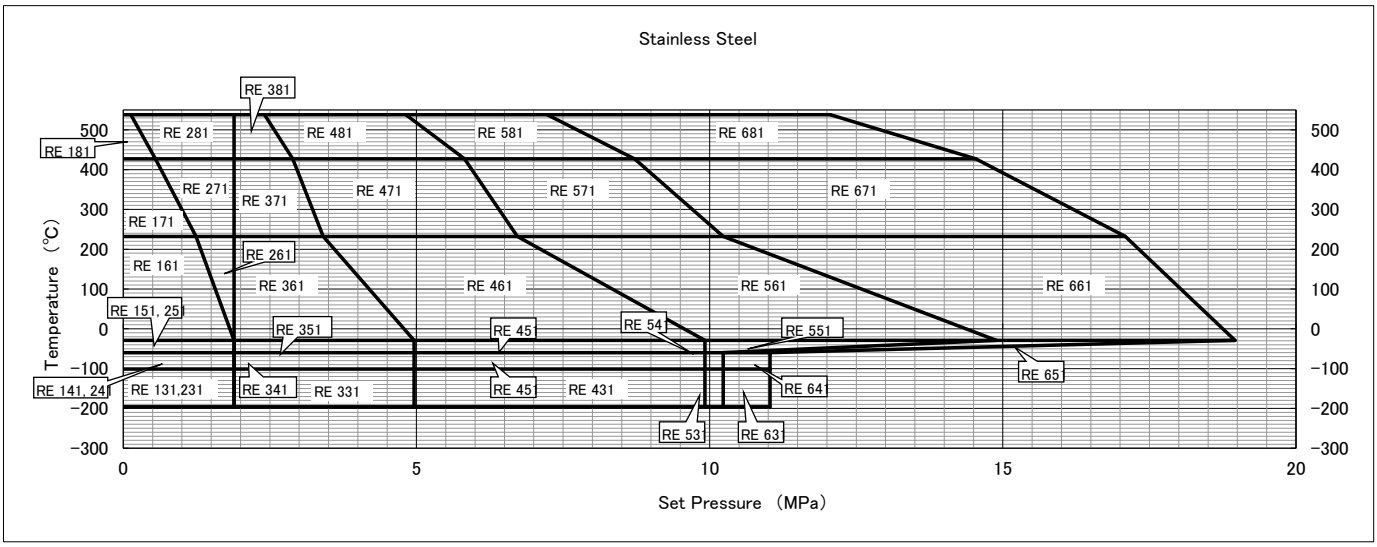

1-7. API pressure vs. temperature standard for orifice J (962.1mm²)

J Oriffice		Class	Size	Flange Rating		Maximum Set Pressure MPa					
						Temperature℃					
Body & Bonnet				Inlet	Outlet	-196 to -60	-60 to -29	-29 to 38	232	427	538
Carbon Steel	SCPH2, WCB SCPL1, LCB	1	2xJx3	150LB	150LB			1.96	1.27	0.55	
		2	2xJx3	300LB	150LB			1.96	1.96	1.96	
		3	3xJx4	300LB	150LB			5.1	4.24	2.82	
		4	3xJx4	600LB	150LB			10.2	8.51	5.68	
		5	3xJx4	900LB	150LB			15.3	12.72	8.51	
		6	3xJx4	1500LB	300LB			18.61	18.61	14.2	
Cr-Mo Steel	SCPH21, WC6 SCPH32, WC9 SCPH61, C5	3	3xJx4	300LB	150LB					3.51	1.48
		4	3xJx4	600LB	150LB					6.99	2.96
		5	3xJx4	900LB	150LB					10.51	4.48
		6	3xJx4	1500LB	300LB					17.51	7.44
Stainless Steel	SCS13, CF8 SCS14, CF8M SCS19, CF3 SCS16, CF3M SCS21, CF8C	1	2xJx3	150LB	150LB	1.89	1.89	1.89	1.24	0.55	0.13
		2	2xJx3	300LB	150LB	1.89	1.89	1.89	1.89	1.89	1.89
		3	3xJx4	300LB	150LB	3.44	3.44	4.96	3.41	2.89	2.41
		4	3xJx4	600LB	150LB	4.3	4.3	9.92	6.72	5.82	4.82
		5	3xJx4	900LB	150LB	5.51	5.51	14.89	10.23	8.72	7.23
		6	3xJx4	1500LB	300LB	5.51	5.51	18.61	17.09	14.54	12.06

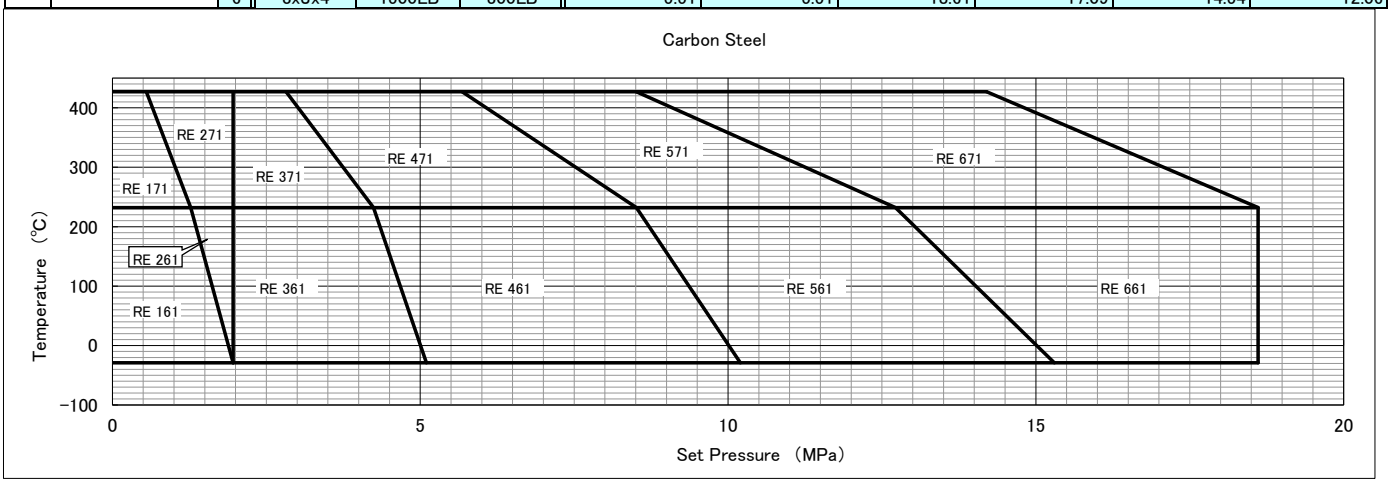

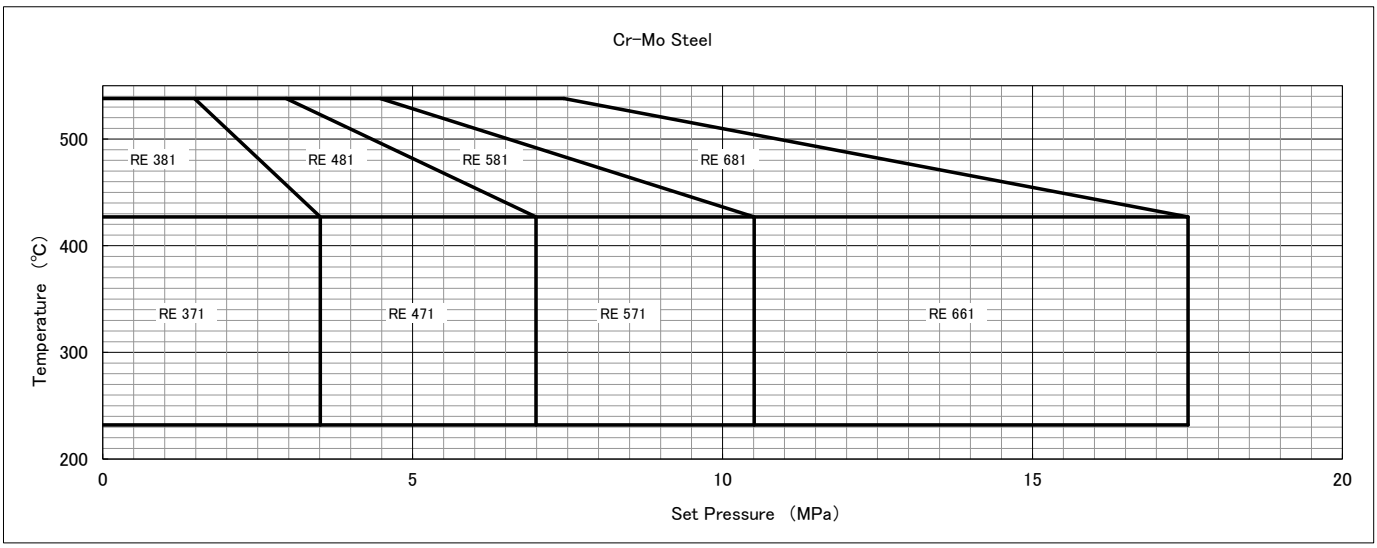

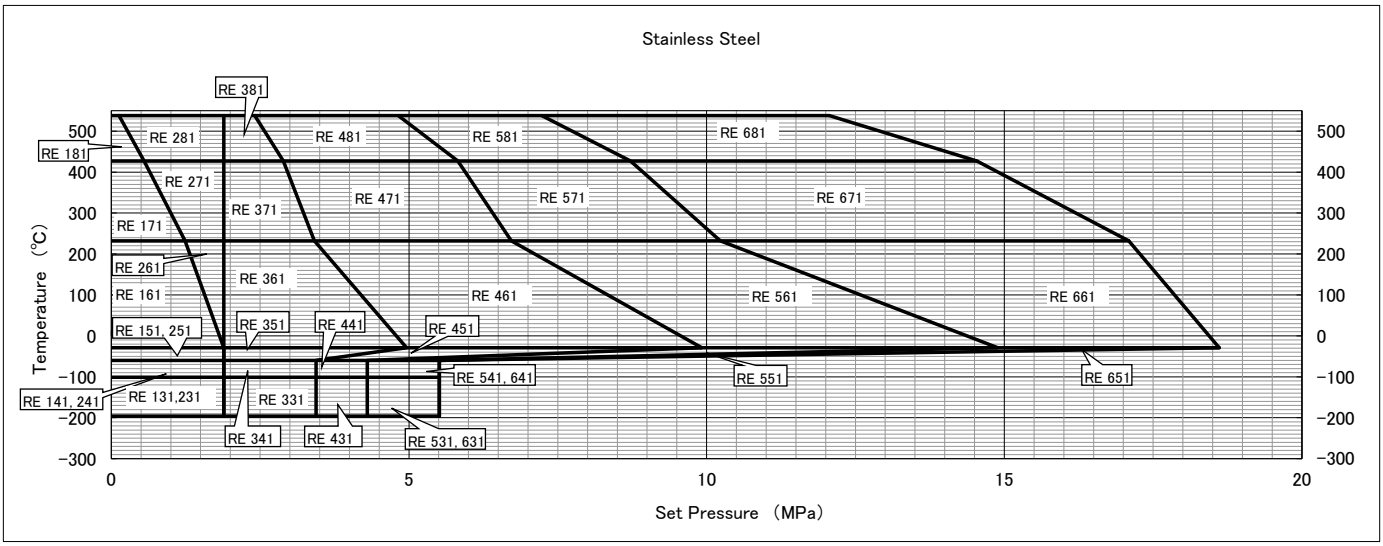

1-7. API pressure vs. temperature standard for orifice K (1372.3mm²)

K Oriffice		Class	Size	Flange Rating		Maximum Set Pressure MPa					
						Temperature℃					
Body & Bonnet				Inlet	Outlet	-196 to -60	-60 to -29	-29 to 38	232	427	538
Carbon Steel	SCPH2, WCB SCPL1, LCB	1	3xKx4	150LB	150LB			1.96	1.27	0.55	
		2	3xKx4	300LB	150LB			1.96	1.96	1.96	
		3	3xKx4	300LB	150LB			5.1	4.24	2.82	
		4	3xKx4	600LB	150LB			10.2	8.51	5.68	
		5	3xKx6	900LB	150LB			15.3	12.72	8.51	
		6	3xKx6	1500LB	300LB			15.3	15.3	14.2	
Cr-Mo Steel	SCPH21, WC6 SCPH32, WC9 SCPH61, C5	3	3xKx4	300LB	150LB					3.51	1.48
		4	3xKx4	600LB	150LB					6.99	2.96
		5	3xKx6	900LB	150LB					10.51	4.48
		6	3xKx6	1500LB	300LB					15.3	7.44
Stainless Steel	SCS13, CF8 SCS14, CF8M SCS19, CF3 SCS16, CF3M SCS21, CF8C	1	3xKx4	150LB	150LB	1.89	1.89	1.89	1.24	0.55	0.13
		2	3xKx4	300LB	150LB	1.89	1.89	1.89	1.89	1.89	1.89
		3	3xKx4	300LB	150LB	3.61	3.61	4.96	3.41	2.89	2.41
		4	3xKx4	600LB	150LB	4.13	4.13	9.92	6.72	5.82	4.82
		5	3xKx6	900LB	150LB	4.13	4.13	14.89	10.23	8.72	7.23
		6	3xKx6	1500LB	300LB	5.17	5.17	15.3	15.3	14.54	12.06

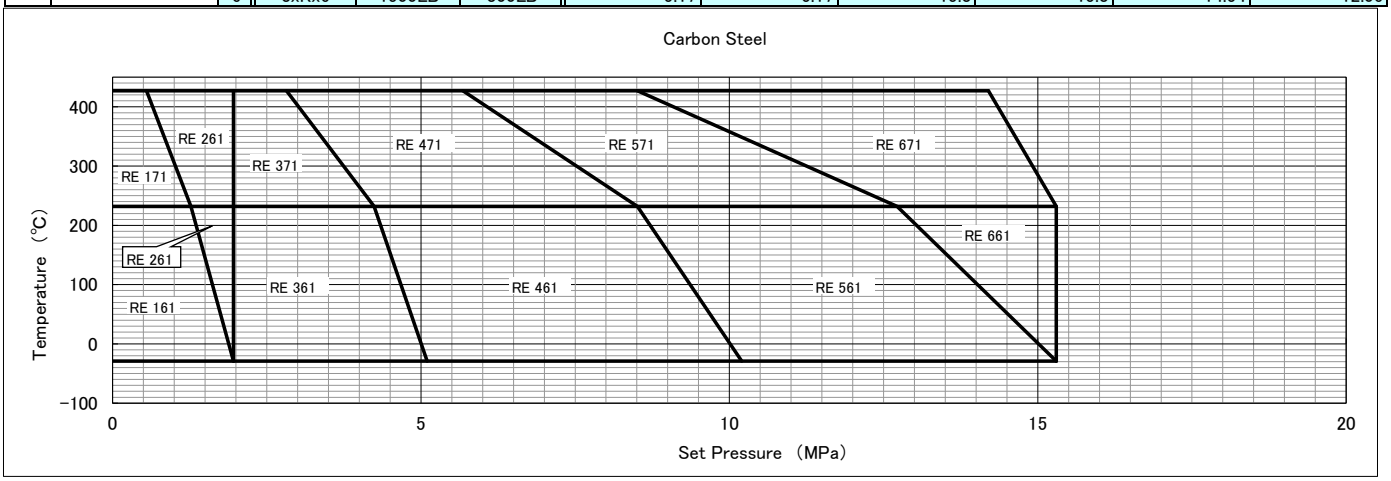

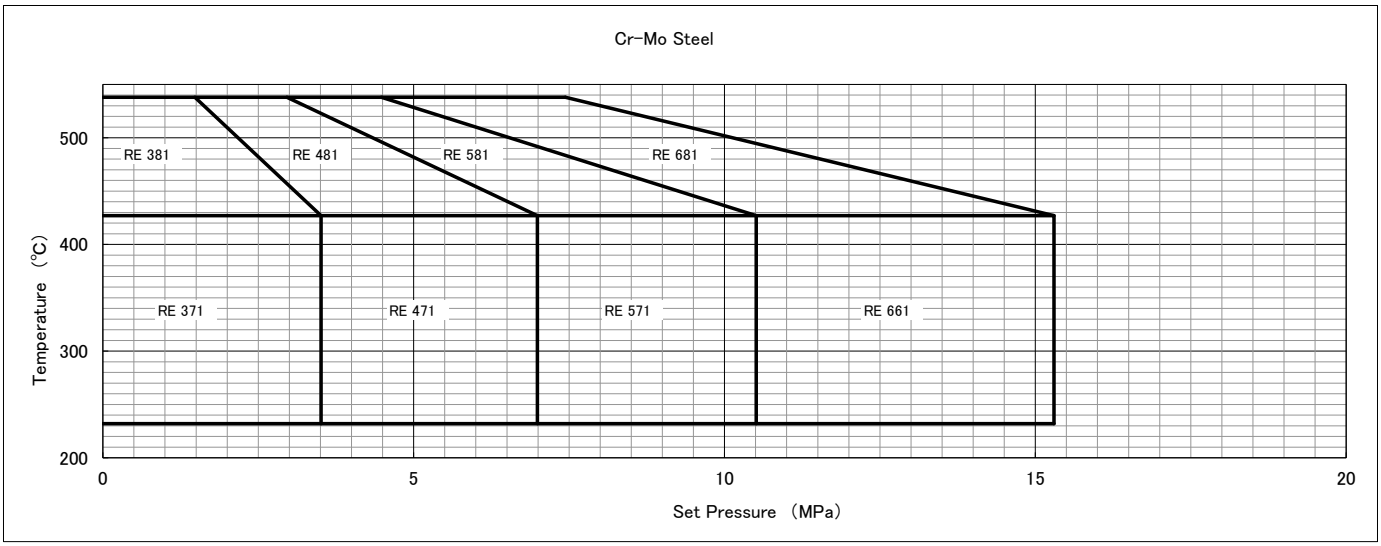

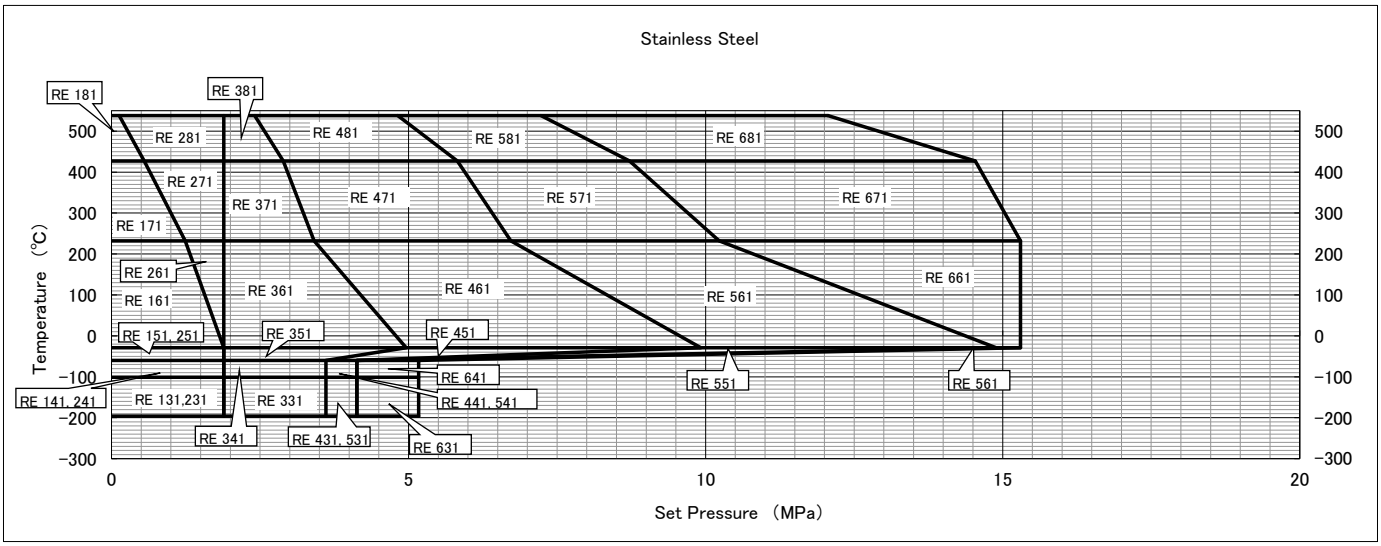

1-7. API pressure vs. temperature standard for orifice L (2140.1mm²)

L Oriffice		Class	Size	Flange Rating		Maximum Set Pressure MPa					
						Temperature℃					
Body & Bonnet				Inlet	Outlet	−196 to −60	−60 to −29	−29 to 38	232	427	538
Carbon Steel	SCPH2, WCB SCPL1, LCB	1	3xLx4	150LB	150LB			1.96	1.27	0.55	
		2	3xLx4	300LB	150LB			1.96	1.96	1.96	
		3	4xLx6	300LB	150LB			5.1	4.24	2.86	
		4	4xLx6	600LB	150LB			6.89	6.89	5.68	
		5	4xLx6	900LB	150LB			10.34	10.34	8.51	
		6	4xLx6	1500LB	150LB			10.34	10.34	10.34	
Cr-Mo Steel	SCPH21, WC6 SCPH32, WC9 SCPH61, C5	3	4xLx6	300LB	150LB					3.51	1.48
		4	4xLx6	600LB	150LB					6.89	2.96
		5	4xLx6	900LB	150LB					10.34	4.48
		6	4xLx6	1500LB	150LB					10.34	7.44
Stainless Steel	SCS13, CF8 SCS14, CF8M SCS19, CF3 SCS16, CF3M SCS21, CF8C	1	3xLx4	150LB	150LB	1.89	1.89	1.89	1.24	0.55	0.13
		2	3xLx4	300LB	150LB	1.89	1.89	1.89	1.89	1.89	1.89
		3	4xLx6	300LB	150LB	3.68	3.68	4.96	3.41	2.89	2.41
		4	4xLx6	600LB	150LB	3.68	3.68	6.89	6.72	5.82	4.82
		5	4xLx6	900LB	150LB	4.82	4.82	10.34	10.23	8.72	7.23

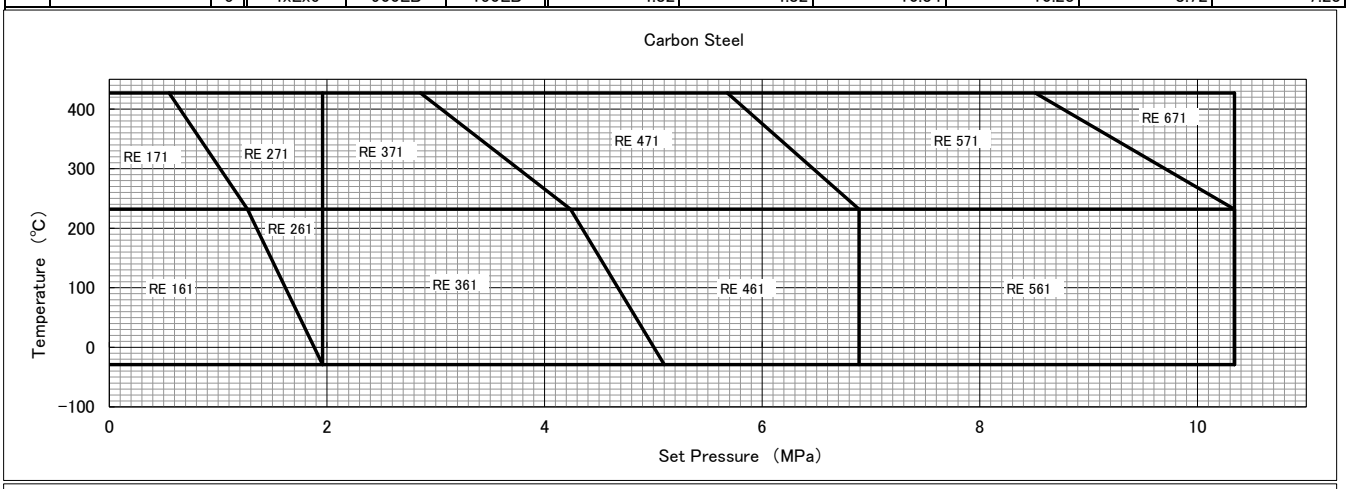

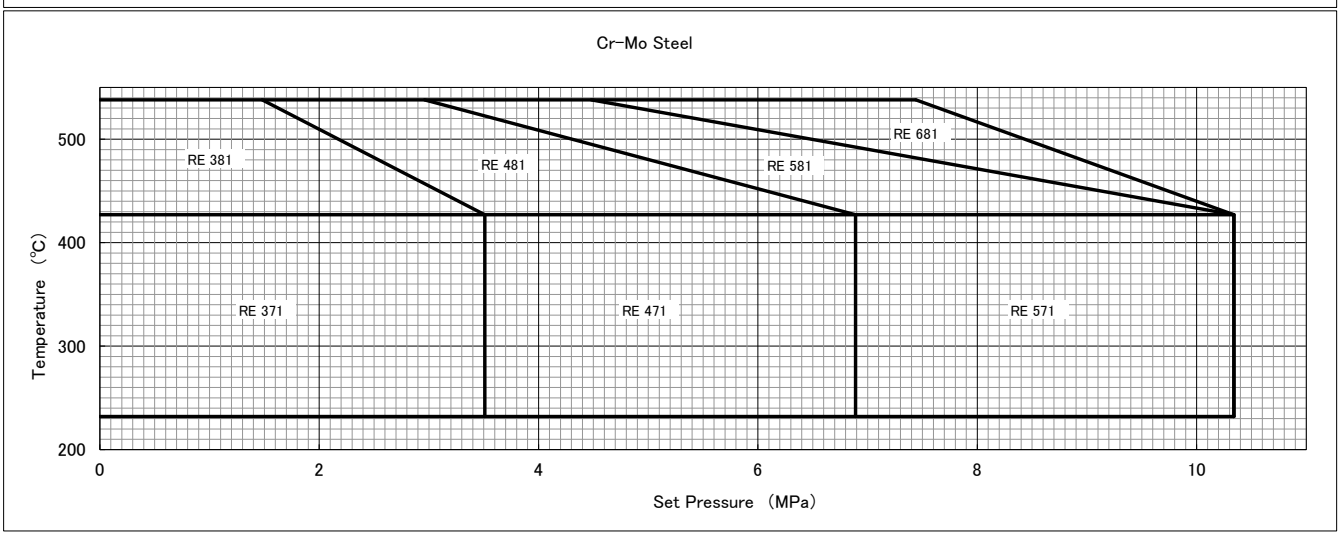

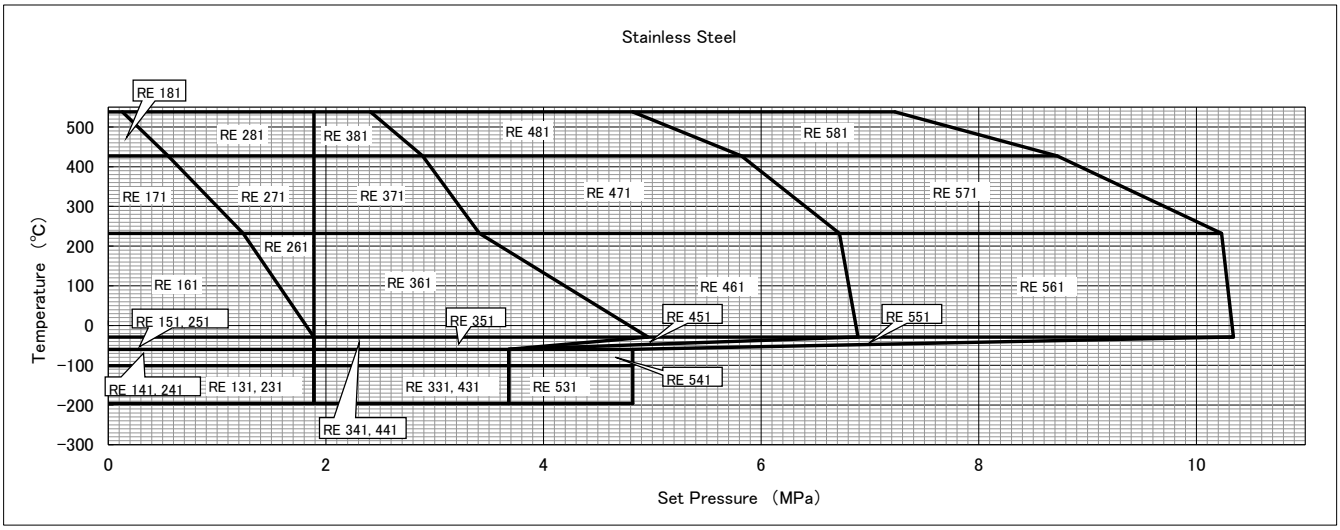

1-7. API pressure vs. temperature standard for orifice M (2687.8mm²)

M Oriffice		Class	Size	Flange Rating		Maximum Set Pressure MPa					
						Temperature℃					
Body & Bonnet				Inlet	Outlet	−196 to −60	−60 to −29	−29 to 38	232	427	538
Carbon Steel	SCPH2, WCB SCPL1, LCB	1	4xMx6	150LB	150LB			1.96	1.27	0.55	
		2	4xMx6	300LB	150LB			1.96	1.96	1.96	
		3	4xMx6	300LB	150LB			5.1	4.24	2.82	
		4	4xMx6	600LB	150LB			7.58	7.58	5.68	
		5	4xMx6	900LB	150LB			7.58	7.58	7.58	
Cr-Mo Steel	SCPH21, WC6 SCPH32, WC9 SCPH61, C5	3	4xMx6	300LB	150LB					3.51	1.48
		4	4xMx6	600LB	150LB					6.99	2.96
		5	4xMx6	900LB	150LB					10.51	4.48
Stainless Steel	SCS13, CF8 SCS14, CF8M SCS19, CF3 SCS16, CF3M SCS21, CF8C	1	4xMx6	150LB	150LB	1.89	1.89	1.89	1.24	0.55	0.13
		2	4xMx6	300LB	150LB	1.89	1.89	1.89	1.89	1.89	1.89
		3	4xMx6	300LB	150LB	3.61	3.61	4.96	3.41	2.89	2.41
		4	4xMx6	600LB	150LB	4.13	4.13	6.89	6.72	5.82	4.82

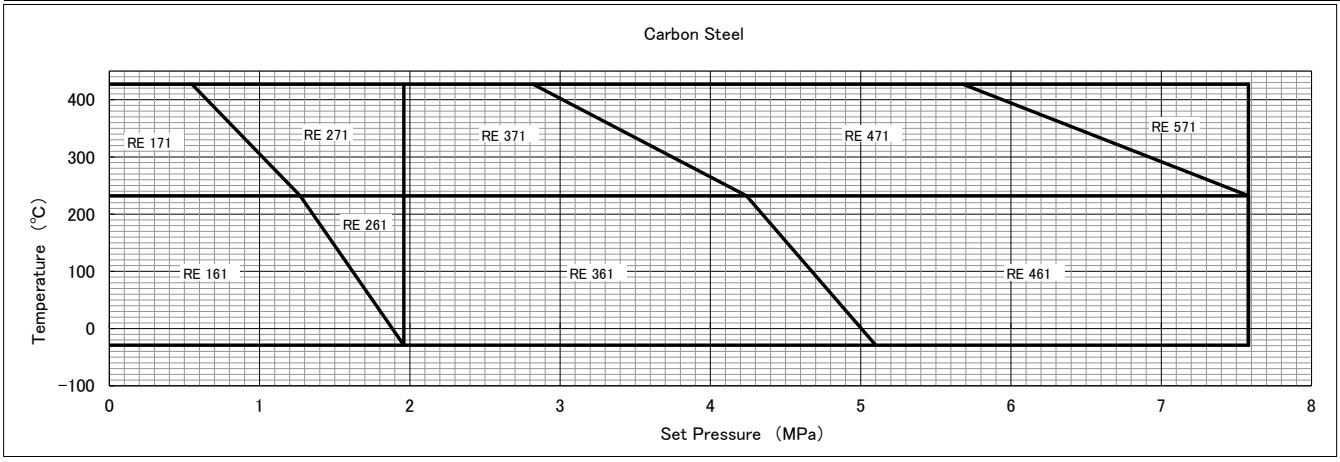

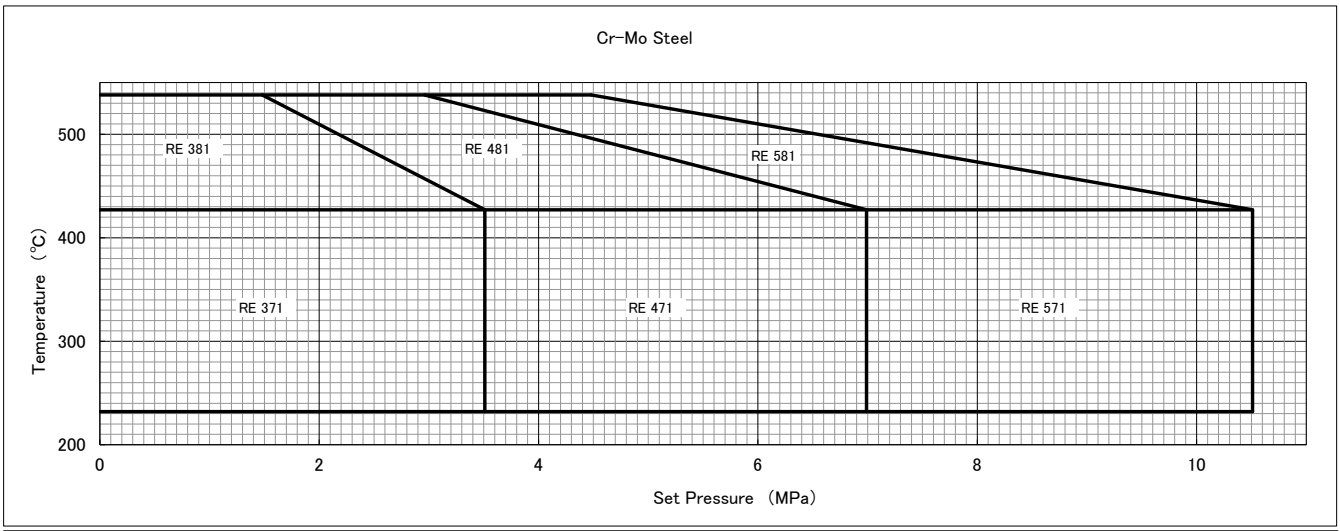

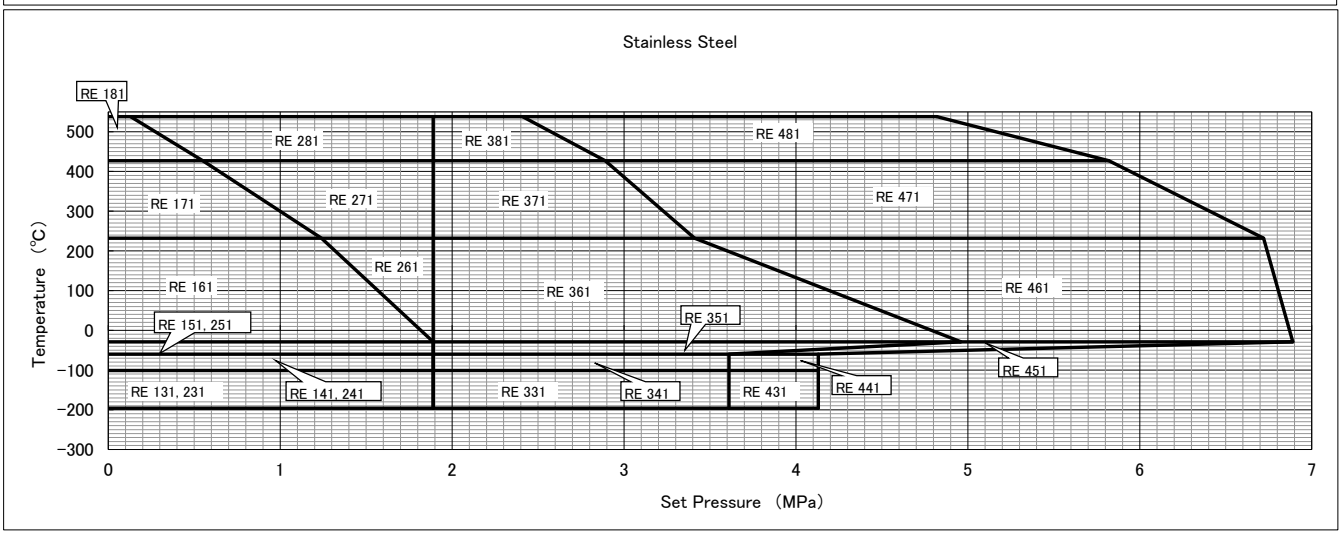

1-7. API pressure vs. temperature standard for orifice N (3267.5mm²)

N Oriffice		Class	Size	Flange Rating		Maximum Set Pressure MPa					
						Temperature℃					
Body & Bonnet				Inlet	Outlet	−196 to −60	−60 to −29	−29 to 38	232	427	538
Carbon Steel	SCPH2, WCB SCPL1, LCB	1	4xNx6	150LB	150LB			1.96	1.27	0.55	
		2	4xNx6	300LB	150LB			1.96	1.96	1.96	
		3	4xNx6	300LB	150LB			5.1	4.24	2.82	
		4	4xNx6	600LB	150LB			6.89	6.89	5.68	
		5	4xNx6	900LB	150LB			6.89	6.89	6.89	
Cr-Mo Steel	SCPH21, WC6 SCPH32, WC9 SCPH61, C5	3	4xNx6	300LB	150LB					3.51	1.48
		4	4xNx6	600LB	150LB					6.89	2.96
		5	4xNx6	900LB	150LB					6.89	4.48
Stainless Steel	SCS13, CF8 SCS14, CF8M SCS19, CF3 SCS16, CF3M SCS21, CF8C	1	4xNx6	150LB	150LB	1.89	1.89	1.89	1.24	0.55	0.13
		2	4xNx6	300LB	150LB	1.89	1.89	1.89	1.89	1.89	1.89
		3	4xNx6	300LB	150LB	3.1	3.1	4.96	3.41	2.89	2.41
		4	4xNx6	600LB	150LB	3.44	3.44	6.89	6.72	5.82	4.82

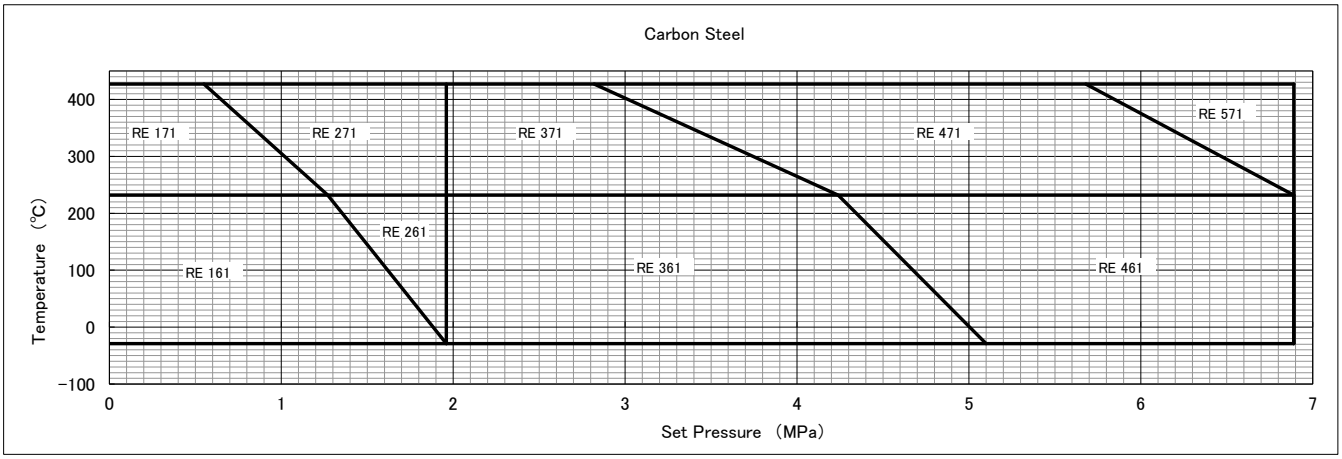

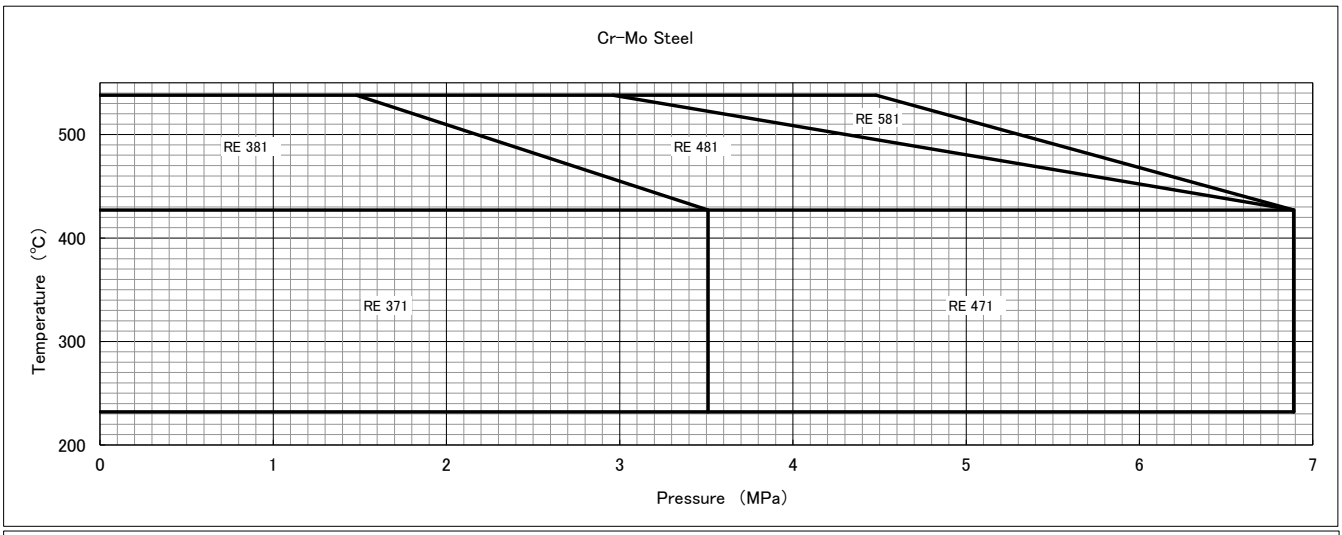

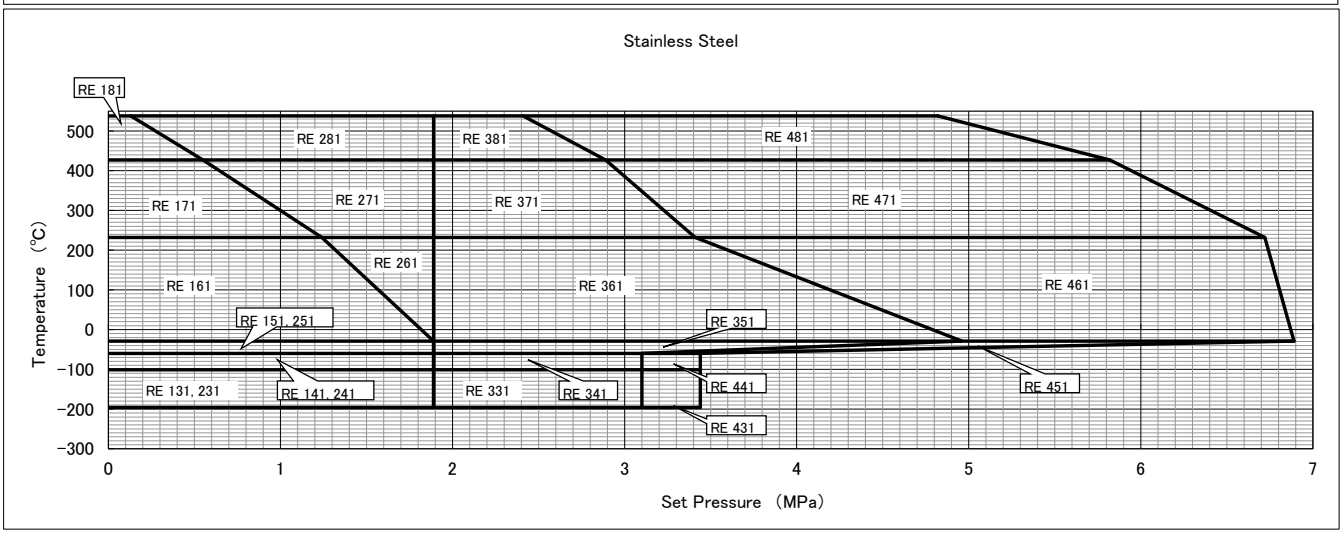

1-7. API pressure vs. temperature standard for orifice P (4778.4mm²)

P Oriffice		Class	Size	Flange Rating		Maximum Set Pressure MPa					
						Temperature℃					
Body & Bonnet				Inlet	Outlet	−196 to −60	−60 to −29	−29 to 38	232	427	538
Carbon Steel	SCPH2, WCB SCPL1, LCB	1	4xPx6	150LB	150LB			1.96	1.27	0.55	
		2	4xPx6	300LB	150LB			1.96	1.96	1.96	
		3	4xPx6	300LB	150LB			3.61	3.61	2.82	
		4	4xPx6	600LB	150LB			6.89	6.89	5.68	
		5	4xPx6	900LB	150LB			6.89	6.89	6.89	
Cr-Mo Steel	SCPH21, WC6 SCPH32, WC9 SCPH61, C5	3	4xPx6	300LB	150LB				3.51	3.51	1.48
		4	4xPx6	600LB	150LB				6.89	6.89	2.96
		5	4xPx6	900LB	150LB				6.89	6.89	4.48
Stainless Steel	SCS13, CF8 SCS14, CF8M SCS19, CF3 SCS16, CF3M SCS21, CF8C	1	4xPx6	150LB	150LB	1.2	1.2	1.89	1.24	0.55	0.13
		2	4xPx6	300LB	150LB	1.2	1.2	1.89	1.89	1.89	1.89
		3	4xPx6	300LB	150LB	2.06	2.06	3.61	3.41	2.89	2.41
		4	4xPx6	600LB	150LB	3.3	3.3	6.89	6.72	5.82	4.82

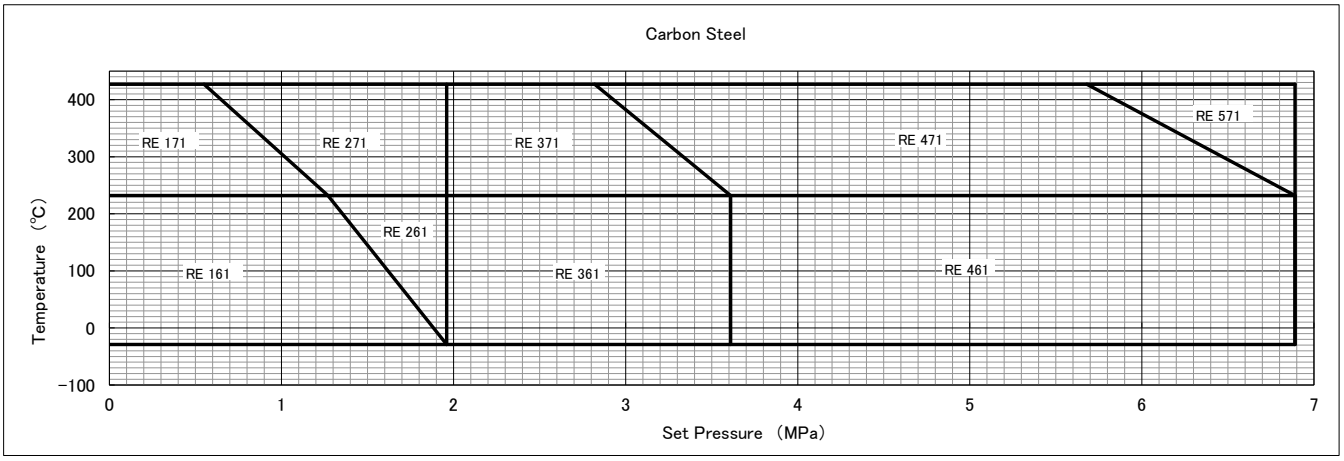

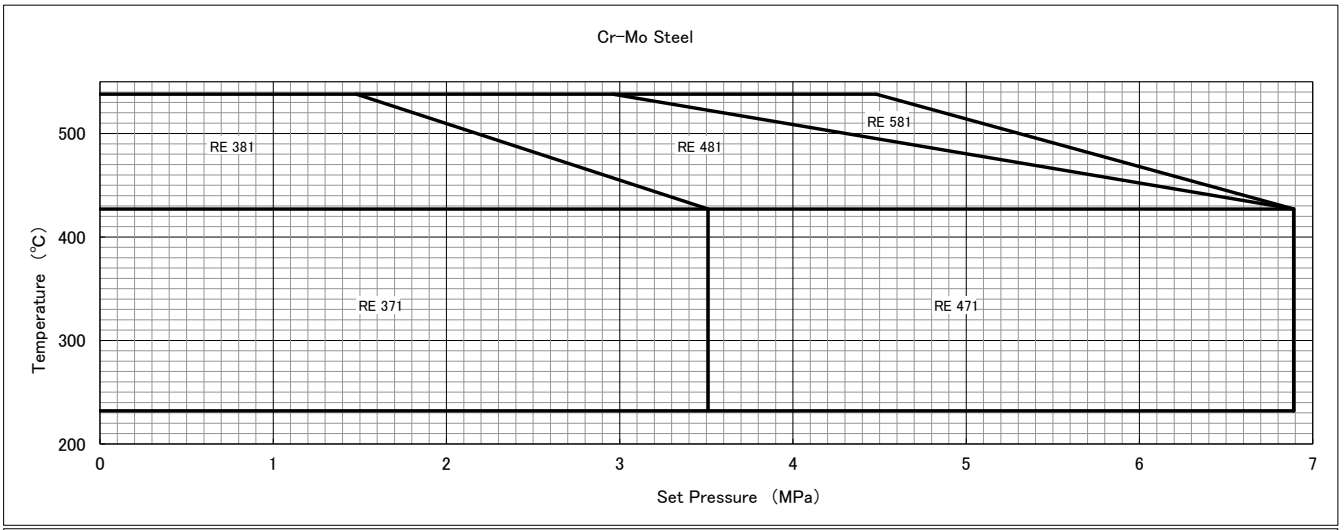

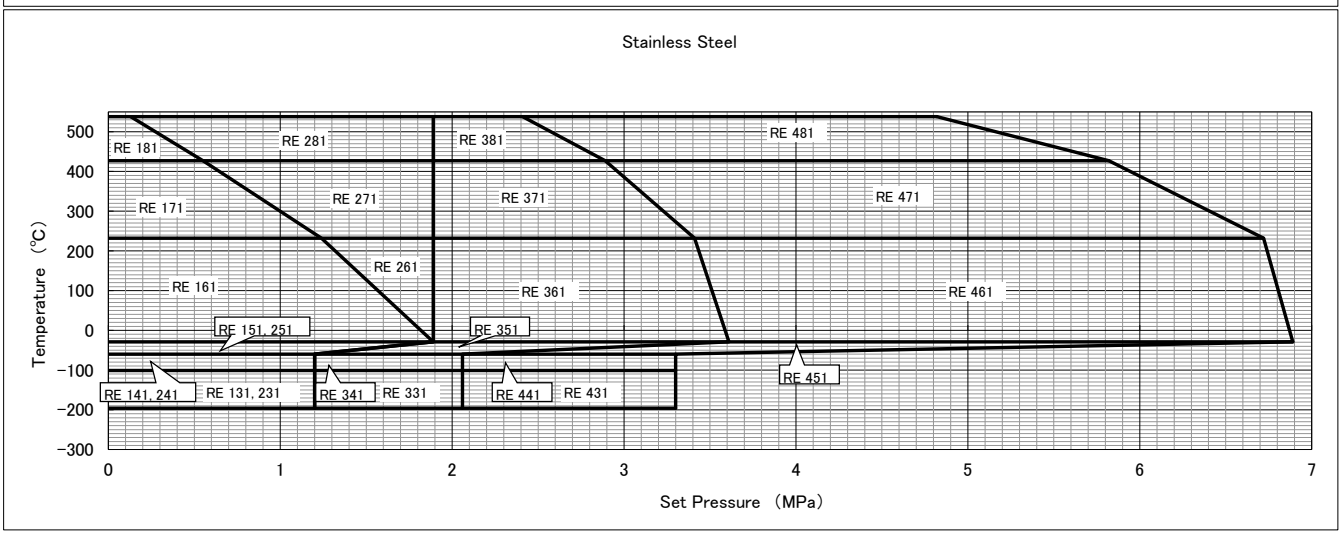

1-7. API pressure vs. temperature standard for orifice Q (8413.4mm²)

Q Oriffice		Class	Size	Flange Rating		Maximum Set Pressure MPa					
						Temperature℃					
Body & Bonnet				Inlet	Outlet	−196 to −60	−60 to −29	−29 to 38	232	427	538
Carbon Steel	SCPH2, WCB SCPL1, LCB	1	6xQx8	150LB	150LB			1.13	1.13	0.55	
		2	6xQx8	300LB	150LB			1.13	1.13	1.13	
		3	6xQx8	300LB	150LB			2.06	2.06	2.06	
		4	6xQx8	600LB	150LB			4.13	4.13	4.13	
Cr-Mo Steel	SCPH21, WC6 SCPH32, WC9 SCPH61, C5	3	6xQx8	300LB	150LB					1.13	1.13
		4	6xQx8	600LB	150LB					4.13	2.96
Stainless Steel	SCS13, CF8 SCS14, CF8M SCS19, CF3 SCS16, CF3M SCS21, CF8C	1	6xQx8	150LB	150LB	1.13	1.13	1.13	1.13	0.55	0.13
		2	6xQx8	300LB	150LB	1.13	1.13	1.13	1.13	1.13	1.13
		3	6xQx8	300LB	150LB	1.72	1.72	2.06	2.06	2.06	2.06
		4	6xQx8	600LB	150LB	2.06	2.06	4.13	4.13	4.13	4.13

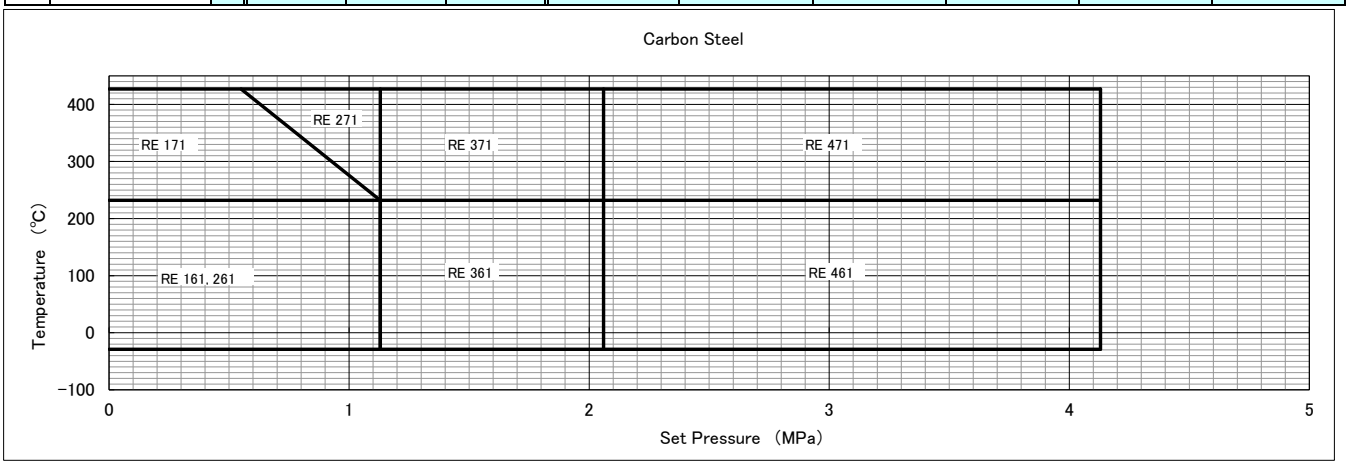

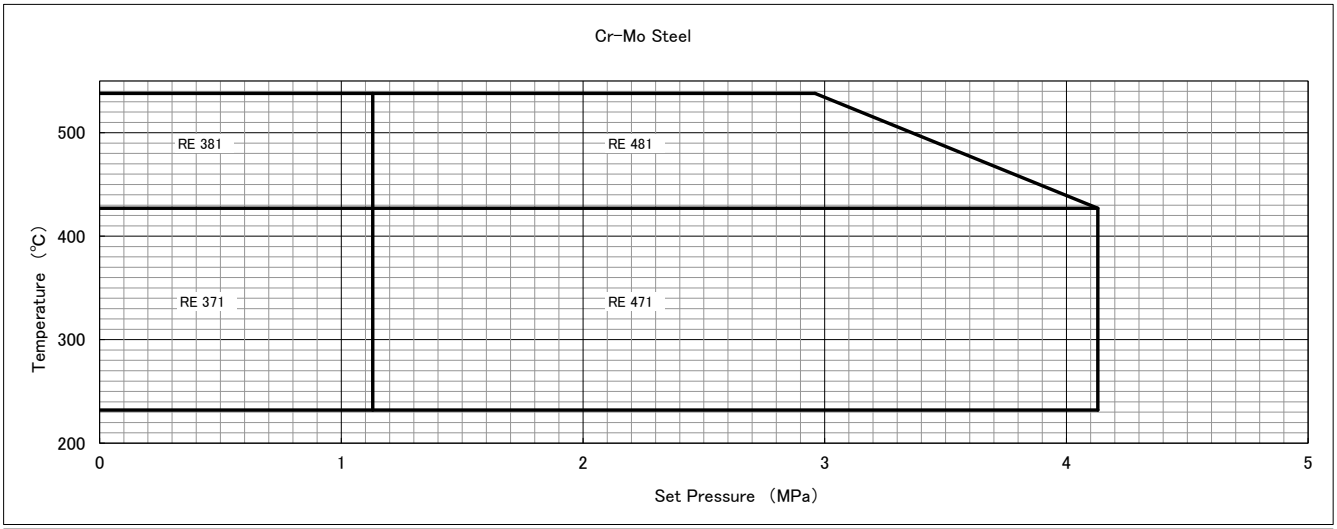

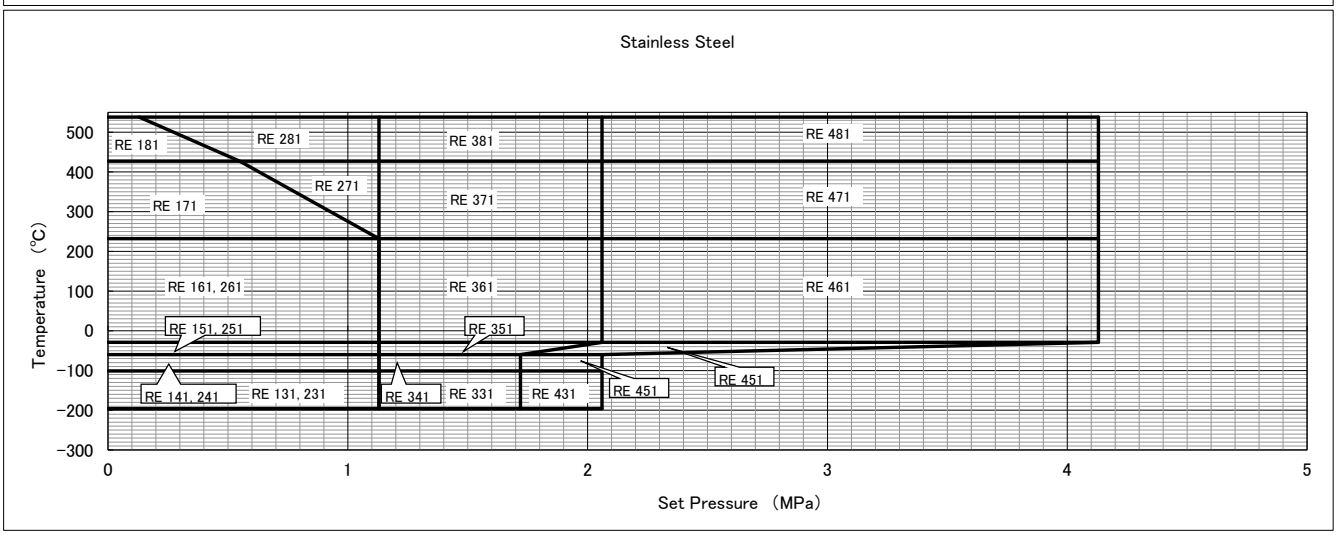

1-7. API pressure vs. temperature standard for orifice R (11940.3mm²)

R Oriffice		Class	Size	Flange Rating		Maximum Set Pressure MPa					
						Temperature℃					
Body & Bonnet				Inlet	Outlet	−196 to −60	−60 to −29	−29 to 38	232	427	538
Carbon Steel	SCPH2, WCB SCPL1, LCB	1	6xRx8	150LB	150LB			0.68	0.68	0.55	
		2	6xRx8	300LB	150LB			0.68	0.68	0.68	
		3	6xRx10	300LB	150LB			1.58	1.58	1.58	
		4	6xRx10	600LB	150LB			2.06	2.06	2.06	
Cr-Mo Steel	SCPH21, WC6 SCPH32, WC9 SCPH61, C5	3	6xRx8	300LB	150LB					0.68	0.68
		4	6xRx10	600LB	150LB					2.06	2.06
Stainless Steel	SCS13, CF8 SCS14, CF8M SCS19, CF3 SCS16, CF3M SCS21, CF8C	1	6xRx8	150LB	150LB	0.37	0.37	0.68	0.68	0.55	0.13
		2	6xRx8	300LB	150LB	0.37	0.37	0.68	0.68	0.55	0.13
		3	6xRx10	300LB	150LB	1.03	1.03	1.58	1.58	1.58	1.58
		4	6xRx10	600LB	150LB	1.37	1.37	2.06	2.06	2.06	2.06

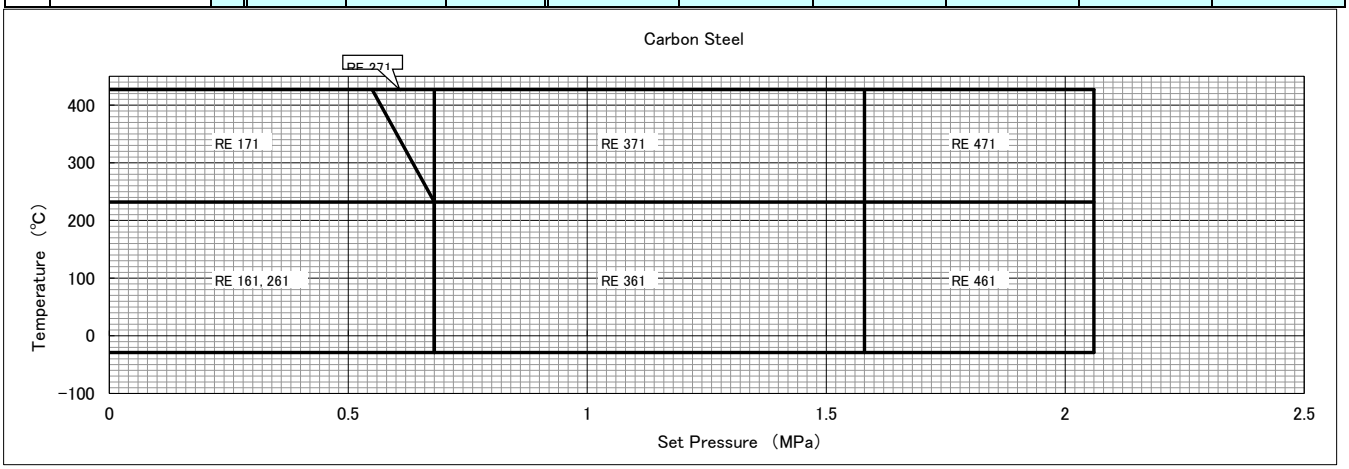

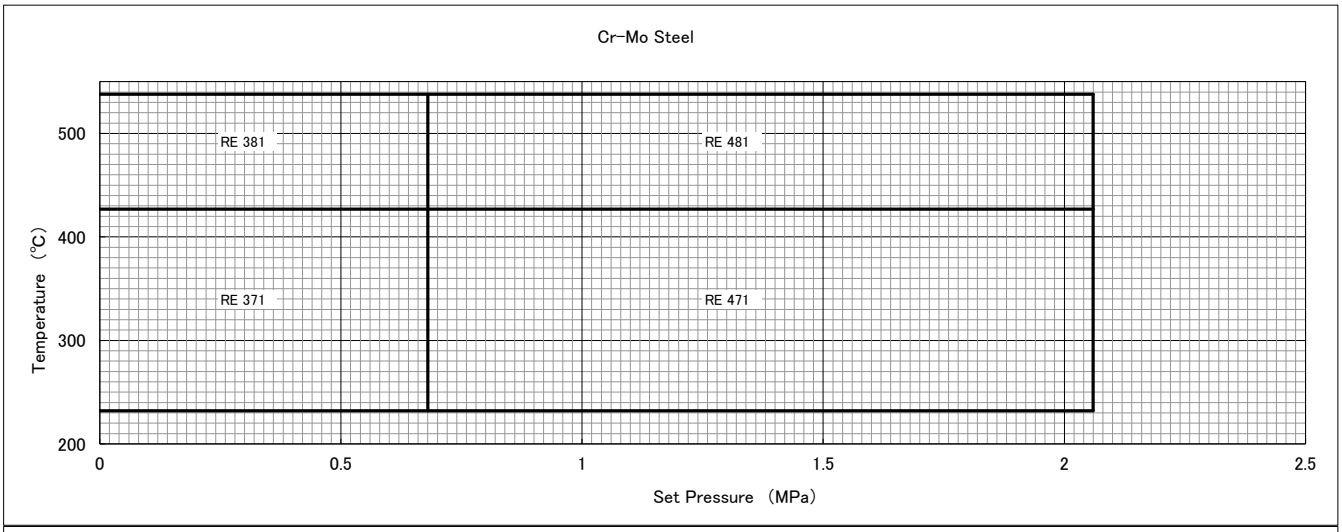

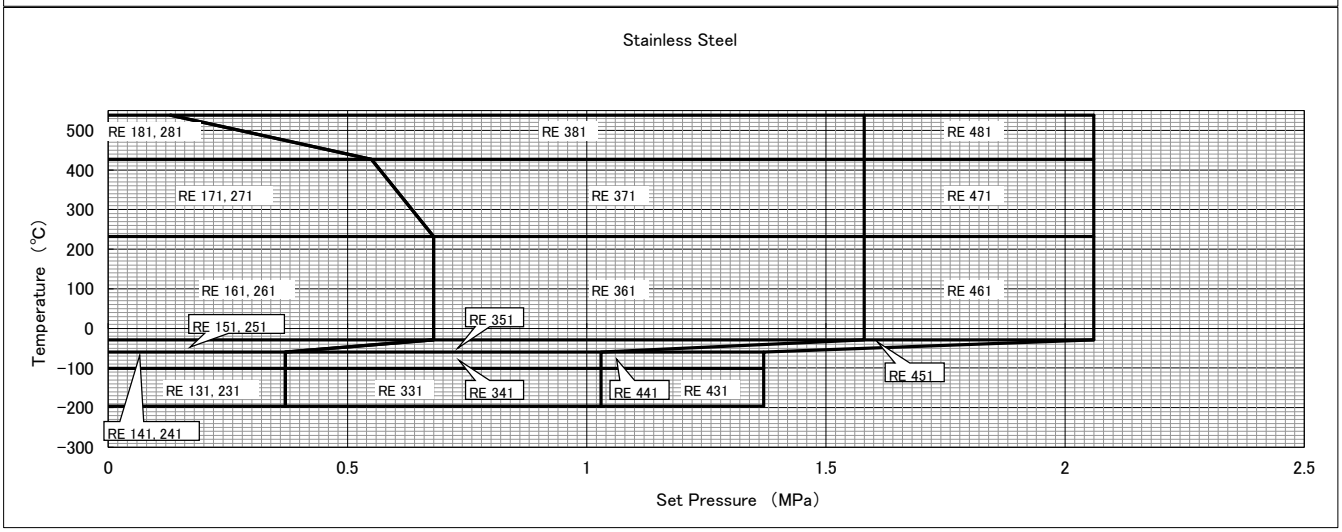

1-7. API pressure vs. temperature standard for orifice T (18869.2mm²)

T Oriffice		Class	Size	Flange Rating		Maximum Set Pressure MPa					
						Temperature℃					
Body & Bonnet				Inlet	Outlet	−196 to −60	−60 to −29	−29 to 38	232	427	538
Carbon Steel	SCPH2, WCB SCPL1, LCB	1	8xTx10	150LB	150LB			0.44	0.44	0.44	
		2	8xTx10	300LB	150LB			0.44	0.44	0.44	
		3	8xTx10	300LB	150LB			0.82	0.82	0.82	
		4	8xTx10	300LB	150LB			2.06	2.06	2.06	
Cr-Mo Steel	SCPH21, WC6 SCPH32, WC9 SCPH61, C5	3	8xTx10	300LB	150LB					0.82	0.68
		4	8xTx10	300LB	150LB					2.06	1.55
Stainless Steel	SCS13, CF8 SCS14, CF8M SCS19, CF3 SCS16, CF3M SCS21, CF8C	1	8xTx10	150LB	150LB	0.34	0.34	0.44	0.44	0.44	0.13
		2	8xTx10	300LB	150LB	0.34	0.34	0.44	0.44	0.44	0.13
		3	8xTx10	300LB	150LB	0.44	0.44	0.82	0.82	0.82	0.82

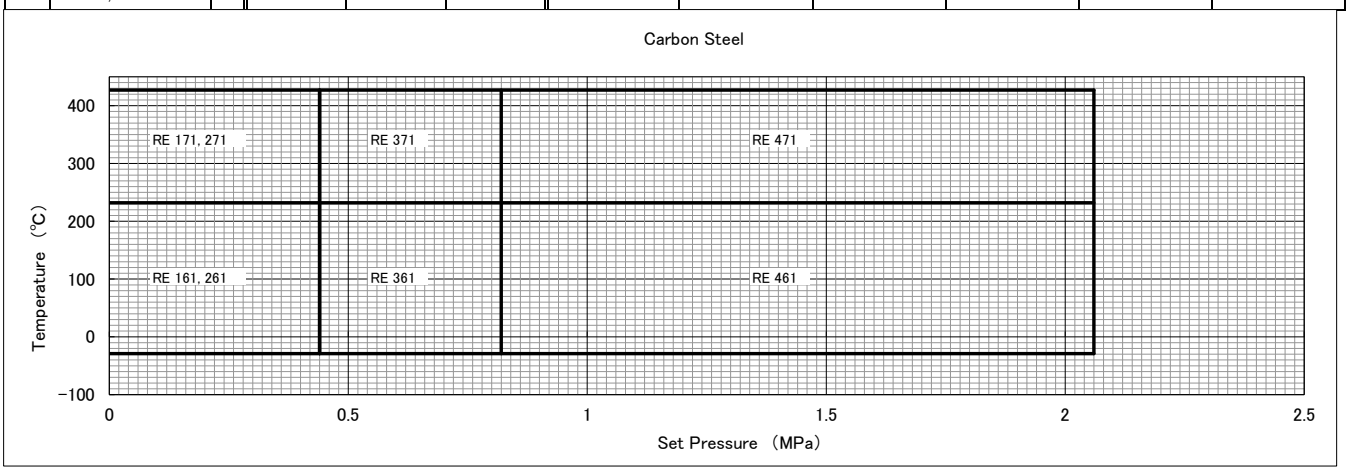

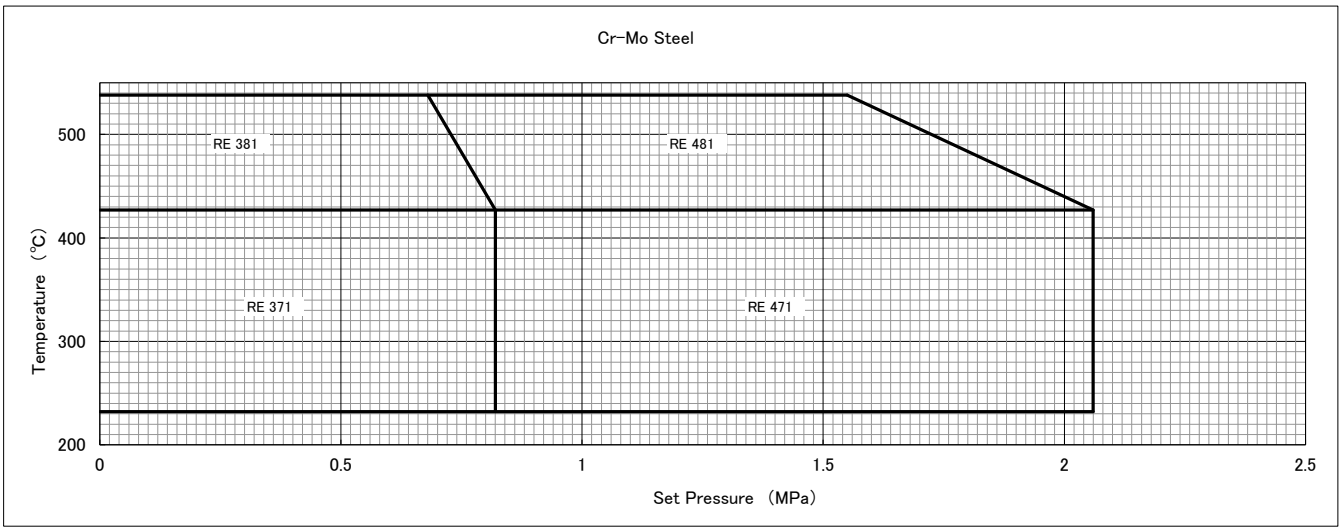

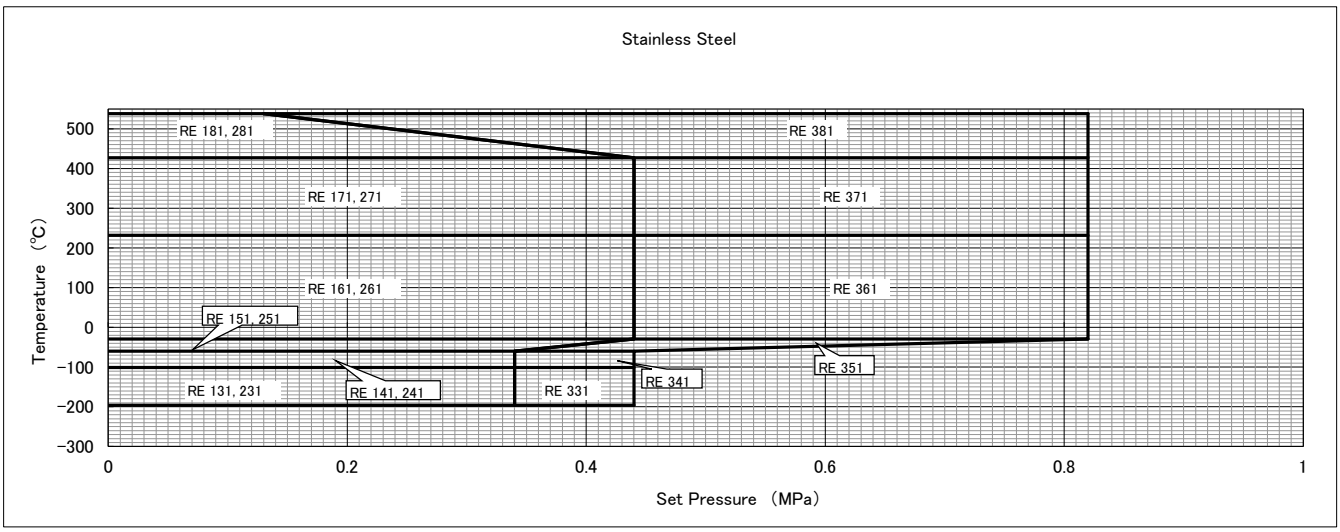

2. REC/REB (large bore type)

RE Series safety valves are available in large bores to meet a variety of needs, and this large-bore type has been developed for distilling plants of low pressure and large capacity.

2-1. Parts name and materials

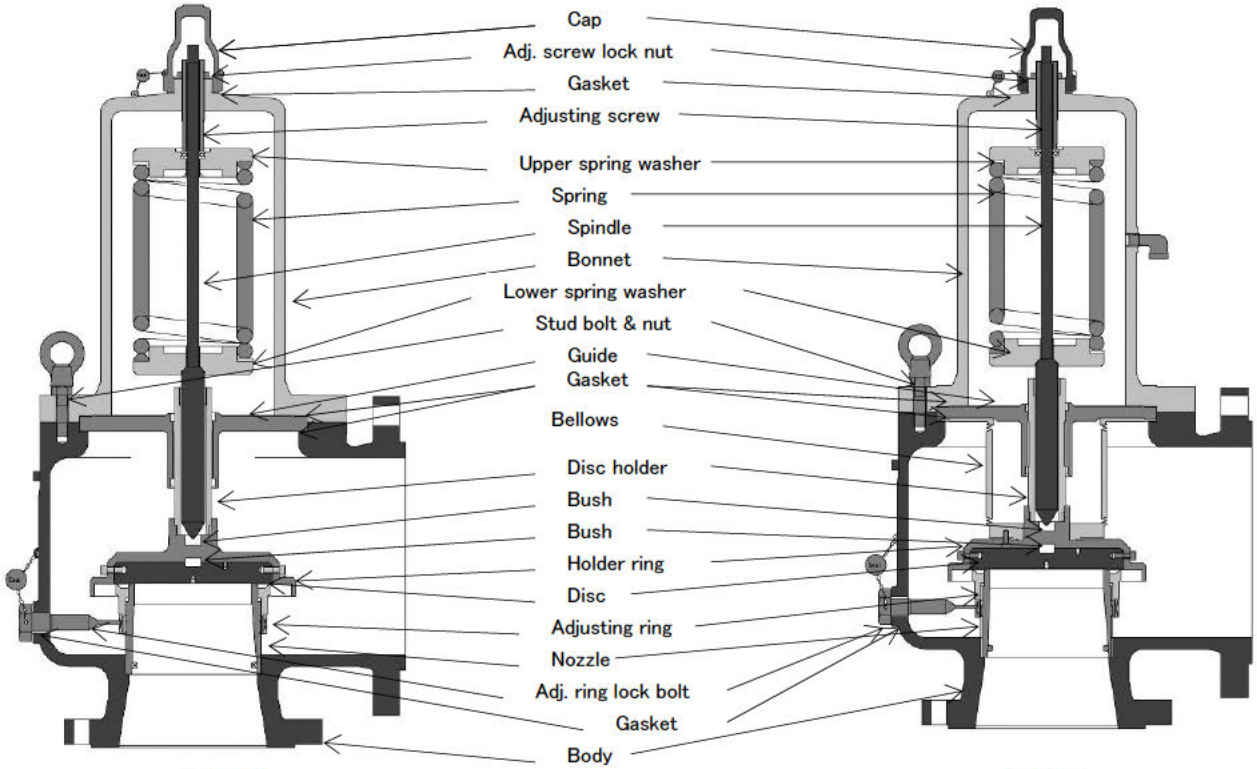

(REC) (REB)

REC/REB parts materials

Parts name	232～-29 ° C	-29～-196 ° C
Body	A216-WCB SCPH2	A351-CF8 SCS13A
Bonnet	A216-WCB SCPH2	A351-CF8 SCS13A
Cap	S25C	SCS13A
Nozzle	SCS13A	SCS13A
Disc	SUS304	SUS304
Disc holder	SUS403	SUS304
Holder ring	SCS1	SCS13A
Spindle	SUS403	SUS304
Guide	SUS304.A105	SUS304
Adjusting ring	SCS13A	SCS13A
Adj. ring lock bolt	S20C	SUS304
Lower spring washer	S25C	SUS304
Upper spring washer	S25C	SUS304
Spring	CARBON STEEL	SUS
Adjusting screw	SUS403	SUS304
Adj. screw lock nut	SUS400	SUS304
Stud bolt & nut	SNB7.S45C	SUS304
Bush (Disc)	STELLITE	STELLITE
Bush (Holder)	MONEL	MONEL
Bellows	SUS316L	SUS316L
Bellows piece	SUS304	SUS304
Gasket	NON ASBESTOS	PTFE

2-1. Parts name and materials

Parts name		S		S1		S2	
		REC	REB	REC	REB	REC	REB
Body		SCS13A or A351-CF8		SCS14A or A351-CF8M		SCS19A or A351-CF3	
Bonnet		SCS13A or A351-CF8		SCS14A or A351-CF8M		SCS19A or A351-CF3	
Cap		SCS13A		SCS14A		SCS19A	
Nozzle		-		SUS316 or SCS14A		SUS304L or SCS19A	
Disc		-		SUS316		SUS304L	
Disc holder		SUS304		SUS316		SUS304L	
Adjusting ring		-		SUS316 or SCS14A		SUS304 or SCS19A	
Adj. ring lock bolt		SUS304		SUS316		SUS304L	
Guide	Guide sleeve	-		SUS316		SUS304L	
	Guide flange	SUS304		SUS316		SUS304L	
Spindle		SUS304		SUS316		SUS304L	
Adjusting screw		SUS304		SUS316		SUS304L	
Adj. screw lock nut		SUS304		SUS316		SUS304L	
Spring washer		SUS304		SUS316		SUS304L	
Spring		SUS304		SUS316		SUS304	
Stud bolt		SUS304		SUS316		SUS304L	
Nut		SUS304		SUS316		SUS304L	
Bellows		None	—	None	—	None	—
Bellows piece		None	—	None	—	None	—
Gasket (Cap)		PTFE or SUS		PTFE or SUS		PTFE or SUS	
Gasket (Bonnet)		PTFE or SUS		PTFE or SUS		PTFE or SUS	
Gasket (Body)		PTFE or SUS		PTFE or SUS		PTFE or SUS	
Gasket (Lock bolt)		PTFE or SUS		PTFE or SUS		PTFE or SUS	

Parts name		S3		S4	
		REC	REB	REC	REB
Body		SCS16A or A351-CF3M		SCS21 or A351-CF8C	
Bonnet		SCS16A or A351-CF3M		SCS21 or A351-CF8C	
Cap		SCS16A		SCS14A	
Nozzle		SUS316L or SCS16A		SUS321 or SCS21	
Disc		SUS316L		SUS321	
Disc holder		SUS316L		SUS316	
Adjusting ring		SUS316L or SCS16A		SUS316 or SCS14A	
Adj. ring lock bolt		SUS316L		SUS316	
Guide	Guide sleeve	SUS316L		SUS316	
	Guide flange	SUS316L		SUS316	
Spindle		SUS316L		SUS316	
Adjusting screw		SUS316L		SUS316	
Adj. screw lock nut		SUS316L		SUS316	
Spring washer		SUS316L		SUS316	
Spring		SUS316		SUS316	
Stud bolt		SUS316L		SUS316	
Nut		SUS316L		SUS316	
Bellows		None	—	None	—
Bellows piece		None	—	None	—
Gasket (Cap)		PTFE or SUS		PTFE or SUS	
Gasket (Bonnet)		PTFE or SUS		PTFE or SUS	
Gasket (Body)		PTFE or SUS		PTFE or SUS	
Gasket (Lock bolt)		PTFE or SUS		PTFE or SUS	

2-1. Parts name and materials

Parts name		S18	S19	S20	S21
		REB	REB	REB	REB
Body		SCS13A or A351-CF8	SCS14A or A351-CF8M	SCS19A or A351-CF3	SCS16A or A351-CF3M
Bonnet		–	–	–	–
Cap		–	–	–	–
Nozzle		–	SUS316 or SCS14A	SUS304L or SCS19A	SUS316L or SCS16A
Disc		–	SUS316	SUS304L	SUS316L
Disc holder		SUS304	SUS316	SUS304L	SUS316L
Adjusting ring		–	SUS316 or SCS14A	SUS304 or SCS19A	SUS316L or SCS16A
Adj. ring lock bolt		SUS304	SUS316	SUS304L	SUS316L
Guide	Guide sleeve	–	SUS316	SUS304L	SUS316L
	Guide flange	–	–	–	–
Spindle		–	–	–	–
Adjusting screw		–	–	–	–
Adj. screw lock nut		–	–	–	–
Spring washer		–	–	–	–
Spring		–	–	–	–
Stud bolt		–	–	–	–
Nut		–	–	–	–
Bellows		–	—	—	—
Bellows piece		–	—	—	—
Gasket (Cap)		PTFE or SUS	PTFE or SUS	PTFE or SUS	PTFE or SUS
Gasket (Bonnet)		PTFE or SUS	PTFE or SUS	PTFE or SUS	PTFE or SUS
Gasket (Body)		PTFE or SUS	PTFE or SUS	PTFE or SUS	PTFE or SUS
Gasket (Lock bolt)		PTFE or SUS	PTFE or SUS	PTFE or SUS	PTFE or SUS

2-2. Dimensions, weight and orifice effective area (for ASME flange)

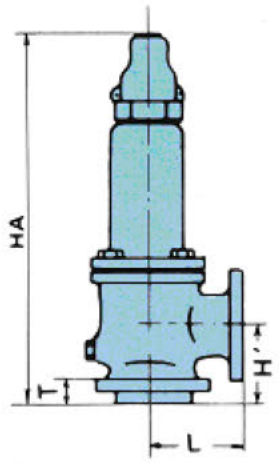

Dimensions and weight

Unit: mm

Size	Pressure limits(MPa) (-196℃～232℃)	Connection ASME flange		Dimensions - mm				Weight kg
Inlet x Orifice x Outlet		Inlet	Outlet	H'	L	HA (Cap form A/B)	T	
10 V 14	0.703	150	150	325	400	1700	48	950
12 W 16	0.703	150	150	375	400	1750	51	1250
14 Y 18	0.703	150	150	400	500	1900	54	1350
16 Z 18	0.703	150	150	425	500	1900	58	1450
16 Z2 18	0.703	150	150	425	530	2000	58	1650
16 Z2 20	0.703	150	150	450	530	2100	58	1800
18 A 24	0.703	150	150	500	630	2280	61	2100
20 B 24	0.60	150	150	500	630	2450	64	2400

The effective area each of orifices used in the large-bore series is as follows:

The units of area are mm^2 for the upper field and in^2 for the lower of the tables, respectively.

Orifice symbol	V	W	Y	Z
Throat area	30946	44488	60698	66966
	47.97	68.96	94.08	103.8

Orifice symbol	Z2	A	B
Throat area	79672	100090	123780
	123.49	155.15	191.87

3. RECL-PE (forged body type)

This RECL-PE has been developed mainly for feed water heaters and other similar equipment in which a liquid is subjected to high temperature and high pressure. Therefore, this series is designed to withstand a harsh service environment of high temperature and high pressure with respect to valve structure and materials.

The features of the series include:

- Optimized shape of major sections that has realized smooth operating characteristics for liquid use.
- Forged valve body that can accommodate an excess pipe stress.
- Surface-hardened sliding section that can permit continuous valve operation, and more.

For details, please contact our Business Department.

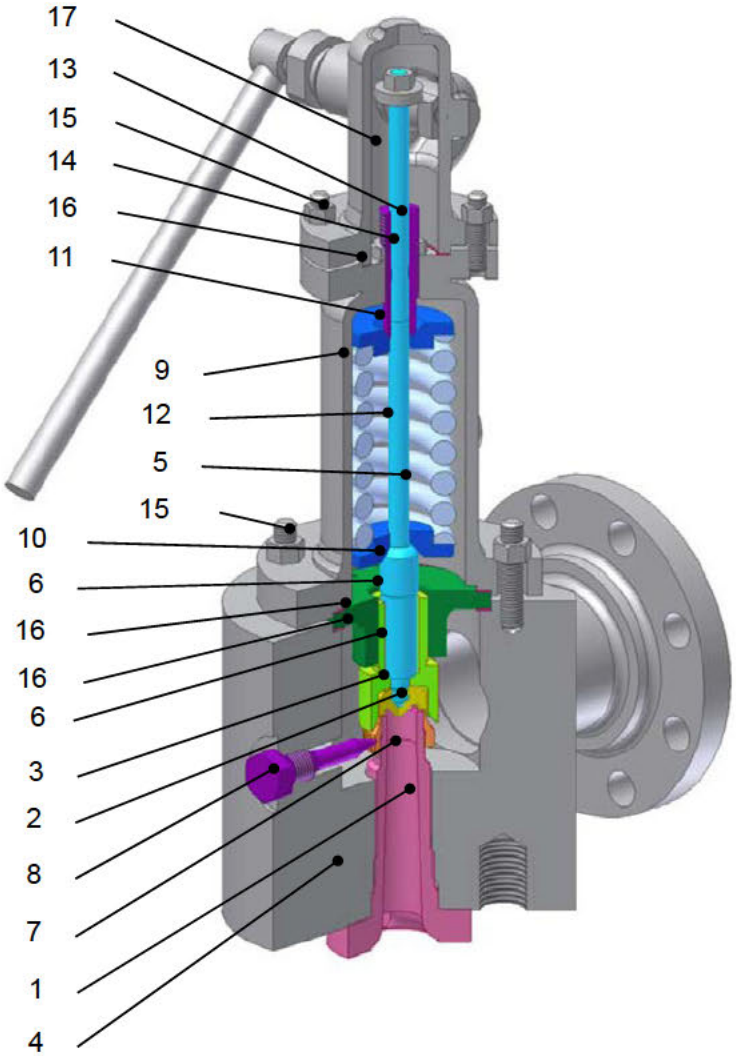

	Parts name	Material
1	Nozzle	A105
2	Disc	SUS630
3	Disc holder	SUS403
4	Body	A105
5	Spindle	SUS403
6	Guide	SUS304
7	Adjusting ring	SUS304
8	Adj. ring lock bolt	S20C
9	Bonnet	SCPH2
10	Lower spring washer	S25C
11	Upper spring washer	S25C
12	Spring	Spring steel
13	Adjusting screw	SUS403
14	Adj. screw lock nut	SS400
15	Stud bolt & nut	SNB7/S45C
16	Gasket	Non asbestos or Steel with less than 0.15% carbon
17	Cap	SCPH2

3. RECL-PE (forged body type)

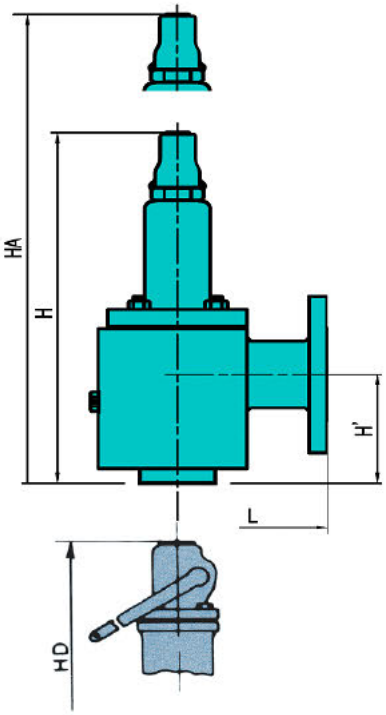

Size	Style	Throat area cm²	ASME flange Connection		Center to face		Height		Dismantling height	Weight
					Inlet	Outlet				
			Inlet	Outlet	H'	L	H	HD	HA	kg
$1^1/_2$×D×2	RECL 561,571	0.882	900	300	100	150	430	480	650	36
$1^1/_2$×D×2	RECL 661,671	0.882	1500	300	100	150	430	480	650	36
$1^1/_2$×D×3	RECL 761,771	0.882	2500	300	122	180	520	565	780	61
$1^1/_2$×E×2	RECL 561,571	1.815	900	300	100	150	430	480	650	36
$1^1/_2$×E×2	RECL 661,671	1.815	1500	300	100	150	430	480	650	36
$1^1/_2$×E×3	RECL 761,771	1.815	2500	300	122	180	520	565	780	61
$1^1/_2$×F×3	RECL 561,571	2.433	900	300	122	165	450	500	680	42
$1^1/_2$×F×3	RECL 661,671	2.433	1500	300	122	165	450	500	680	42
$1^1/_2$×F×3	RECL 761,771	2.433	2500	300	122	180	520	565	780	61
$1^1/_2$×G×3	RECL 561,571	3.836	900	300	122	165	470	505	710	43
2×G×3	RECL 661,671	3.836	1500	300	122	200	525	570	790	73
2×G×3	RECL 761,771	3.836	2500	300	122	200	525	570	790	73
2×H×3	RECL 561,571	5.940	900	150	122	175	535	585	800	70
2×H×3	RECL 661,671	5.940	1500	300	122	190	535	585	800	73

4. RECLP (for pump pressure relief)

This product series is intended for use in a place where pulsation occurs in a liquid as found in reciprocating pumps, for example.

The features include:

- Sliding resistance caused by an O-ring provided between the guide and the disc when valve operates, acts to prevent the relief valve from opening/closing due to a pulsating liquid.
- Orifice sizes F to J are available,
- and many more.

For details, please contact our Business Department.

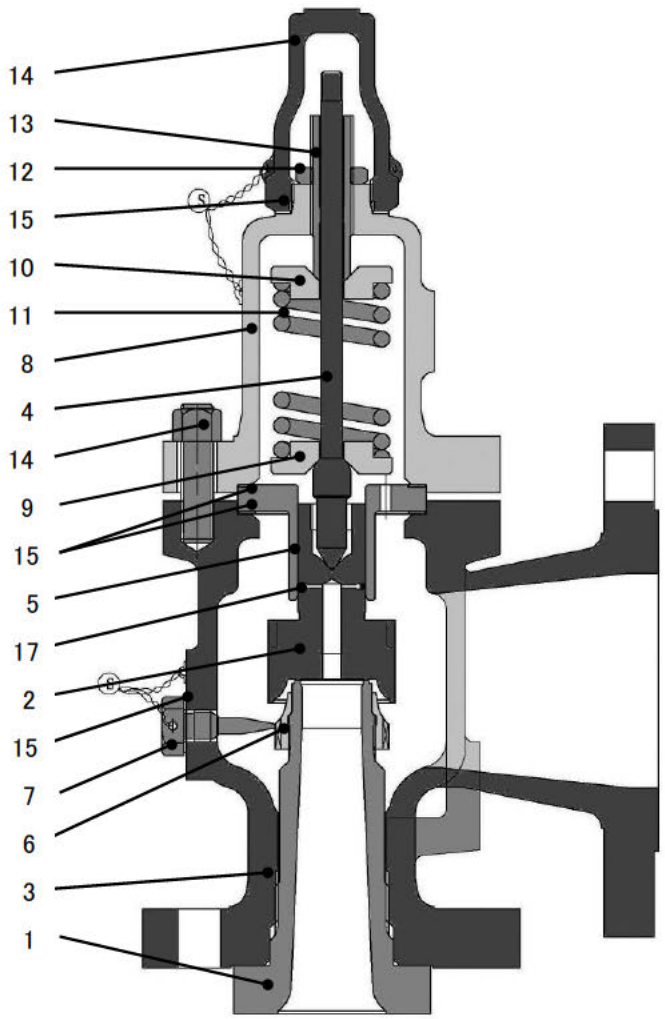

	Parts name	Material
1	Nozzle	SUS304
2	Disc	SUS630
3	Body	SCPH2
4	Spindle	SUS403
5	Guide	SUS304
6	Adjusting ring	SUS304
7	Adj. ring lock bolt	S20C
8	Bonnet	SCPH2
9	Lower spring washer	S25C
10	Upper spring washer	S25C
11	Spring	Spring steel
12	Adjusting screw	SUS403
13	Adj. screw lock nut	SS400
14	Stud bolt & nut	SNB7/S45C
15	Gasket	Non asbestos or Steel with less than 0.15% carbon
16	Cap	S25C
17	O-ring	NBR

5. RECLJ/REBLJ (Jacket type)

This series is suited for use in liquids of high viscosity or those that need to be kept warm.

The features include:

- The entire body is jacketed to heat the safety valve as a whole by supplying steam via the steam-feed flange of the jacket.

For details, please contact our Business Department.

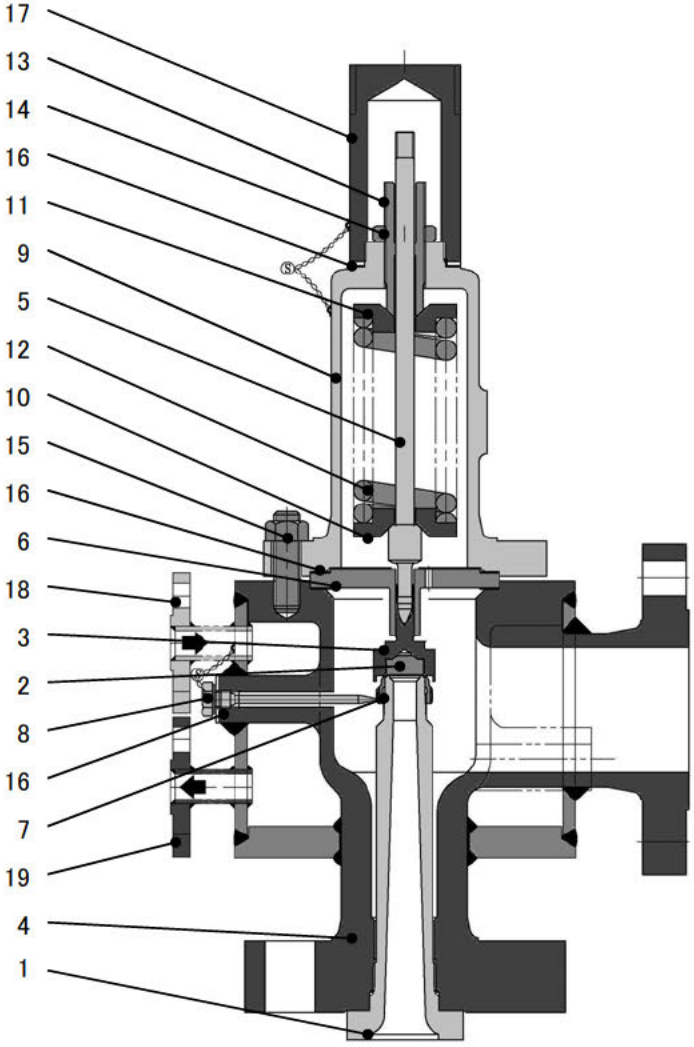

	Parts name	Material
1	Nozzle	SUS304
2	Disc	SUS304
3	Disc holder	SUS403
4	Body	SCPH2
5	Spindle	SUS403
6	Guide	SUS304
7	Adjusting ring	SUS304
8	Adj. ring lock bolt	S20C
9	Bonnet	SCPH2
10	Lower spring washer	S25C
11	Upper spring washer	S25C
12	Spring	Spring steel
13	Adjusting screw	SUS403
14	Adj. screw lock nut	SS400
15	Stud bolt & nut	SNB7/S45C
16	Gasket	Non asbestos or Steel with less than 0.15% carbon
17	Cap	S25C
18	Inlet flange	A105
19	Outlet flange	A105

6. REDW (dead-weight type)

This series is a dead-weight type safety valve that enables operation under a very small pressure or micropressure which is not possible with a spring-loaded type safety valve.

For details, please contact our Business Department.

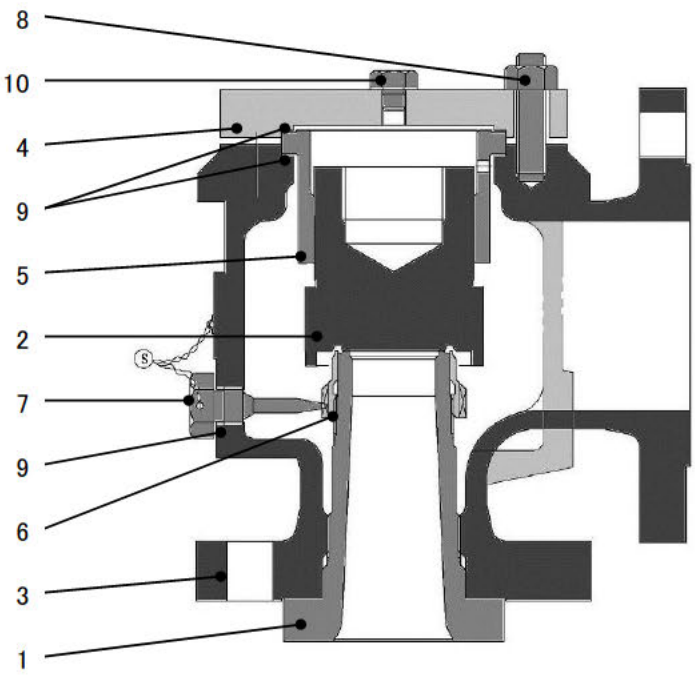

	Parts name	Material
1	Nozzle	SUS304
2	Disc	SUS304
3	Body	SCPH2
4	Cover flange	S25C
5	Guide	SUS304
6	Adjusting ring	SUS304
7	Lock bolt	S20C
8	Stud bolt & nut	SNB7/S45C
9	Gasket	Non asbestos or Steel with less than 0.15% carbon
10	Plug	SS400

7. RE–G/STMG (water sealed type)

This series of products is such that water is filled between the nozzle/disc surfaces for sealing purposes, and is therefore useful when you do not want air flow to be reversed to the primary side from the secondary even if the primary side is put into a vacuum condition.

For details, please contact our Business Department.

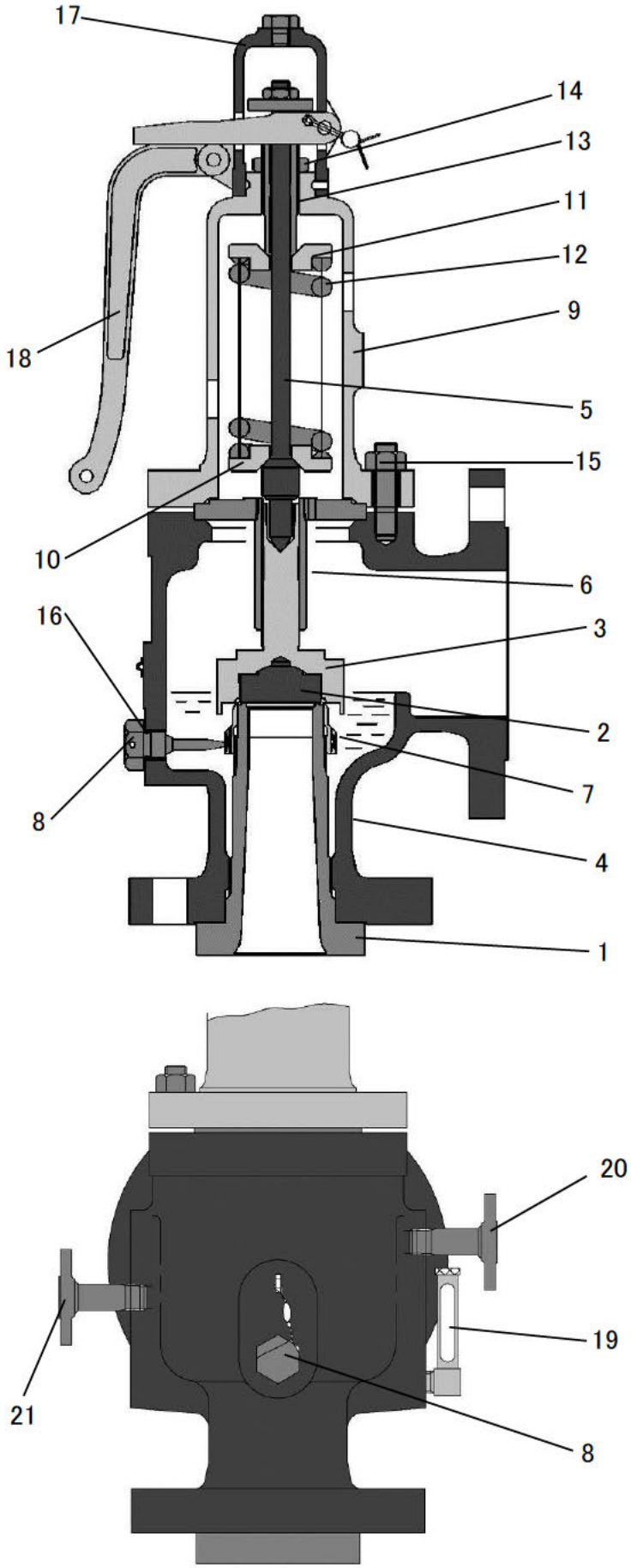

	Parts name	Material
1	Nozzle	SCS13A
2	Disc	SUS630
3	Disc holder	SUS403
4	Body	A216
5	Spindle	SUS403
6	Guide	SUS304
7	Adjusting ring	SCS13A
8	Lock bolt	S20C
9	Bonnet	A216
10	Lower spring washer	S25C
11	Upper spring washer	S25C
12	Spring	Spring steel
13	Adjusting screw	SUS403
14	Adjusting screw lock nut	SS400
15	Stud bolt & nut	SNB7/S45C
16	Gasket	Non asbestos or Steel with less than 0.15% carbon
17	Cap	SCMB310
18	Easing lever	FCMB310
19	Water gage	SUS304
20	Feed flange	A105
21	Drain flange	A105

RP Series
for resources development field

Fukui Seisakusho Co., Ltd.

Contents

1. Type code ····· 2
2. Parts name and materials ····· 4
3. Dimensions and weight ····· 6
4. Orifice effective area of safety valve ····· 8
5. Accessories ····· 9
6. Pressure vs. temperature standard ····· 11

1. Type code

■ RP type code system

Our type code system is as follows and should be used for selection.

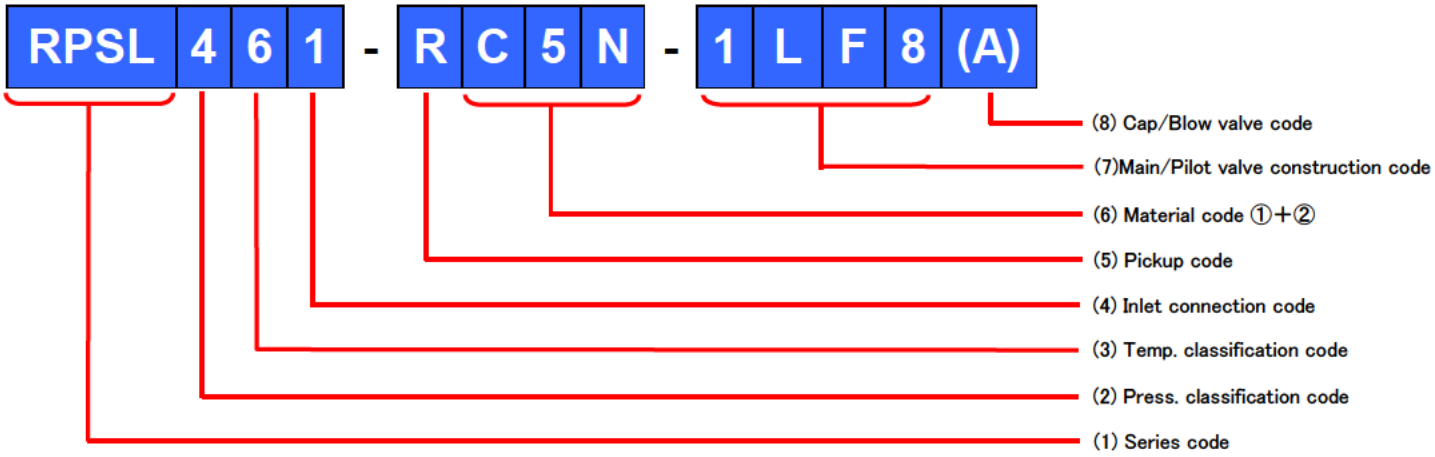

(1) Series code

Code	Series
RPS	Single outlet for gas
RPSL	Single outlet for liquid
RPD	Dual outlet for gas
RPDL	Dual outlet for liquid

(2) Pressure classification code

Code	Rating (ASME,JPI)
1	Class 150
3	Class 300
4	Class 600
5	Class 900
6	Class 1500
7	Class 2500
8	Over Class 2500

(3) Temperature classification code

Code	Temp. range ℃ (°F)
3	-196≦T<-29 (-320≦T<-20)
6	-29≦T<232 (-20≦T<450)
7	232≦T<260 (450≦T<500)
8	260≦T<325 (500≦T<617)

(4) Inlet connection code

Code	Connection code
1	ASME Flange
2	JPI Flange
3	Welding end
4	JIS Flange
5	According to customers

(5) Pickup code

Code	Pickup
I	Internal pickup
R	Remote pickup

(6) Material code①

Code	Material	Code	Material	Code	Material	Code	Material
Blank	A216-WCB	E	A105	S	A351-CF8	G	A182-F304
C2	A217-WC6	E2	A182-F12	S1	A351-CF8M	G1	A182-F316
C5	A352-LCB	E5	A350-LF2	S2	A351-CF3	G2	A182-F304L
—	—	—	—	S3	A351-CF8M	G3	A182-F316L
—	—	—	—	S4	A351-CF8C	G4	A182-F321
M	Monel casting	MF	Monel forging	A	Aluminum alloy casting	AF	Aluminum alloy forging
H	Hastelloy casting	HF	Hastelloy forging	B	Copper alloy casting	BF	Copper alloy forging
—	—	—	—	—	—	T	Titanium
SS	Special/Other material						

1. Type code

(6) Material code②

Code	NACE
Blank	None NACE
N	NACE
R	Non-stainless grade of NACE

Ex.) S1 N
- ① Body material
- ② Add a NACE grade (If necessary)

(7) Main/Pilot valve construction code (③+④+⑤+⑥)

Main valve			Pilot valve				Option			
③	Seat	Seal	④	Pilot type*4	⑤	Seal material	⑥	Backflow preventer	Field test valve	Filter
1	Metal	Elastomer *1	L	Modulate type 0.25～2.5MPa			1	—	—	—
2	Metal	PTFE Seal					2	—	—	YES
3	Metal	Elastomer *2	M	Modulate type 2.5～12.5MPa			3	—	YES	—
4	PTFE	PTFE Seal					4	—	YES	YES
5	RTFE*3	PTFE Seal	H	Modulate type 12.5～68MPa			5	YES	—	—
6	PCTFE	PTFE Seal					6	YES	—	YES
7	PEEK	PTFE Seal	3	Pop action type 0.35～18MPa			7	YES	YES	—
8	VESPEL	PTFE Seal					8	YES	YES	YES
A	Feather lip disc	Elastomer *1								
B	Feather lip disc	PTFE Seal								
C	Feather lip disc	Elastomer *2								
E	EPDM	EPDM			E	EPDM				
F	FKM	FKM			F	FKM				
H	HNBR	HNBR			H	HNBR				
K	Kalrez(FFKM)	Kalrez			K	Kalrez(FFKM)				
N	NBR	NBR			N	NBR				
P	FFKM *5	FFKM *5			P	FFKM *5				
V	VMQ	VMQ			V	VMQ				
Q*1	Other combination		Q	Other	Q	Other				

Remarks

*1 Main valve elastomer is same with pilot valve.

*2 Main valve elastomer is not same with pilot valve.

*3 Reinforced polytetrafluoroethylene.

*4 Pilot valve is Non-flow type.

*5 Perfluoroelastomer

(8) Cap/Manual blow valve code

Code	Structure	Code	Structure	Code	Structure	Code	Structure
(A)	Closed/Screwed	(J)	(A) with manual blow valve	(B)	(A) with test gag	(P)	(B) with manual blow valve

2. Parts name and materials

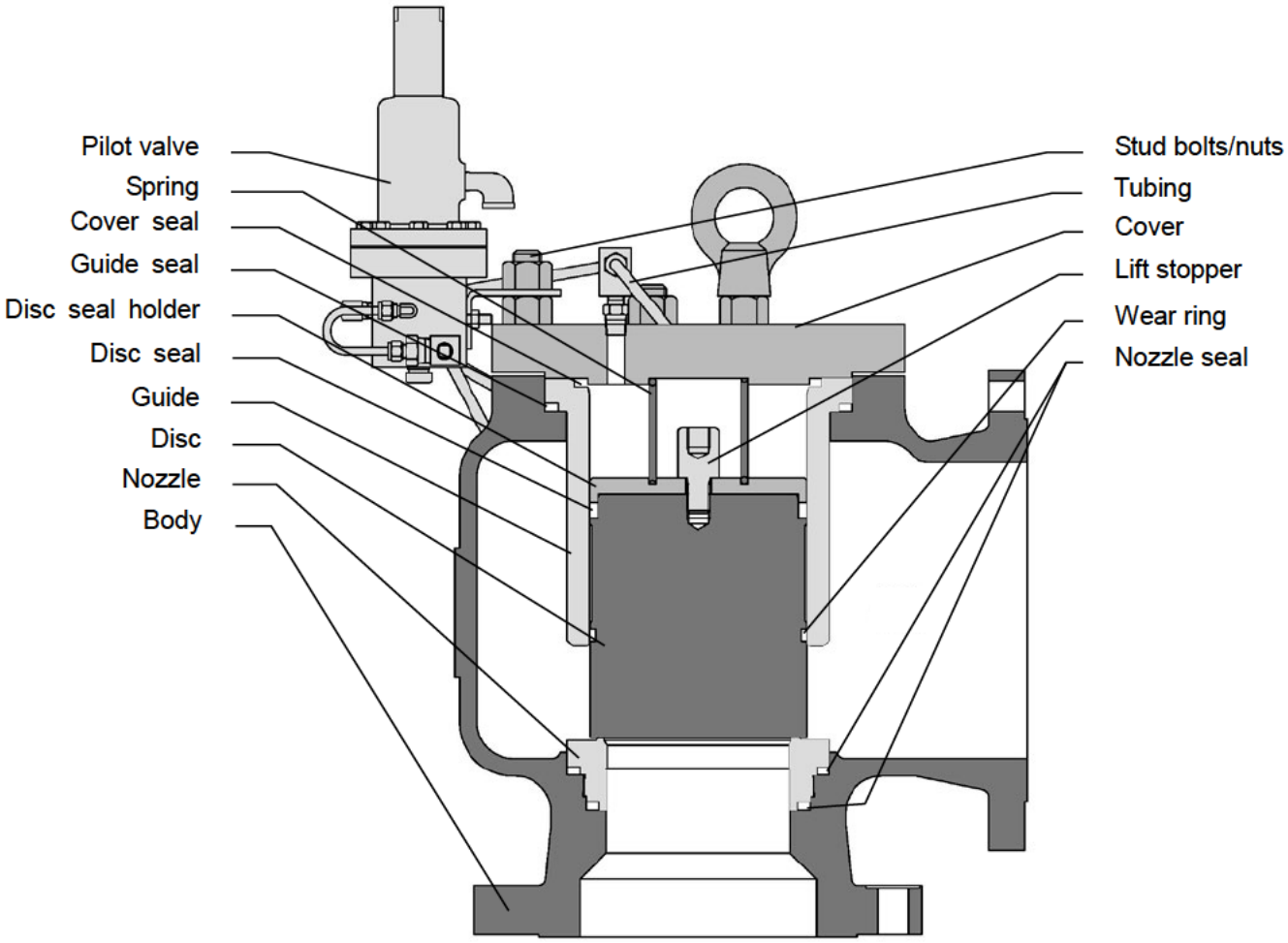

■ Standard material

Series/Temp. code	RPS RPD ( ) 3 ( )	RPS RPD ( ) 6 ( )	
Material code (Refer to table(6))	S	C5	Blank
Temp. Parts name	-196 ～ -46℃	-46 ～ -29℃	-29 ～ 325℃
Body	A351-CF8	A352-LCB	A216-WCB
Cover	SUS304		SA105M
Cover seal	RTFE	Elastomer	
Nozzle	SUS304		
Nozzle seal	RTFE	Elastomer	
Disc	SUS304		
Disc seal	RTFE	Elastomer	
Disc seal holder	SUS304		
Wear ring	PTFE		PTFE or Graphite
Lift stopper	SUS304		
Guide	SUS304 or SCS13A		
Guide seal	RTFE	Elastomer	
Spring	SUS316		
Stud bolts/nuts	SUS304		SNB7.S45C
Tubing	SUS316L-TP		
Pilot valve	SS316		

2. Parts name and materials

Parts name	Material code (Refer to table(6))		
	S1	S2	S3
Body	A351-CF8M	A351-CF3	A351-CF3M
Cover	SUS316	SUS304L	SUS316L
Cover seal	RTFE or Elastomer		
Nozzle	SUS316	SUS304L	SUS316L
Nozzle seal	RTFE or Elastomer		
Disc	SUS316	SUS304L	SUS316L
Disc seal	RTFE or Elastomer		
Disc seal holder	SUS316	SUS304L	SUS316L
Wear ring	PTFE		
Lift stopper	SUS316	SUS304L	SUS316L
Guide	SUS316 or SCS14A	SUS304L or SCS19A	SUS316L or SCS16A
Guide seal	RTFE or Elastomer		
Spring	SUS316		
Stud bolts/nuts	SUS316	SUS304	SUS316
Tubing	SUS316L-TP		
Pilot valve	SS316		

3. Dimensions and weight for RPS type

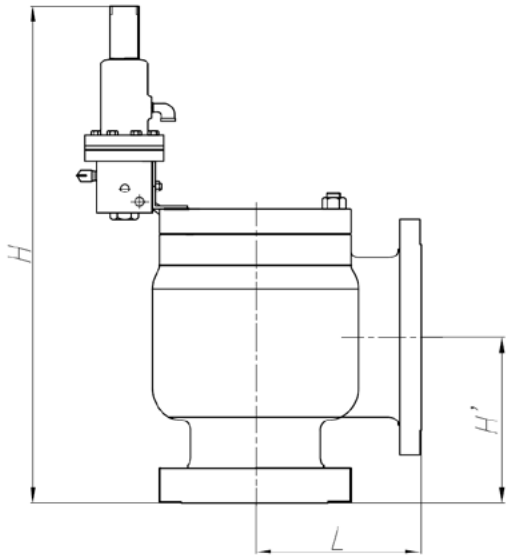

Inlet × Outlet	Orifice symbol	Type	Flange rating		Center to face			Weight
			Inlet	Outlet	H'	L	H(*1)	(kg)
1 X 2	D.E F	RPS1( )1	150	150	105	114	445	25
		RPS3( )1	300		111	114	455	27
		RPS4( )1	600		111	114	455	27
		RPS5( )1	900	300	125	121	480(555)	35
		RPS6( )1	1500		125	121	555	35
		RPS7( )1	2500		125	121	560	37
1 1/2X2	D.E F	RPS1( )1	150	150	124	121	465	26
		RPS3( )1	300		124	121	465	29
		RPS4( )1	600		124	121	465	29
		RPS5( )1	900	300	149	140	505(575)	39
		RPS6( )1	1500		149	140	575	39
		RPS7( )1	2500		149	140	585	45
1 1/2X3	G.H.J	RPS1( )1	150	150	130	124	500	38
		RPS3( )1	300		130	124	510	42
		RPS4( )1	600		130	124	510	42
		RPS5( )1	900	300	162	171	565(635)	60
		RPS6( )1	1500		162	171	635	60
		RPS7( )1	2500		162	171	645	68
2X3	G.H.J	RPS1( )1	150	150	137	124	510	39
		RPS3( )1	300		137	124	515	43
		RPS4( )1	600		137	124	515	43
		RPS5( )1	900	300	167	171	570(640)	66
		RPS6( )1	1500		167	171	640	66
		RPS7( )1	2500		178	171	660	74
3X4	J K.L	RPS1( )1	150	150	156	162	550	55
		RPS3( )1	300		156	162	565	63
		RPS4( )1	600		162	162	575	64
		RPS5( )1	900	300	191	181	615(635)	92
		RPS6( )1	1500		191	181	645	106
4X6	L.M N P	RPS1( )1	150	150	197	210	620	80
		RPS3( )1	300		197	210	630	93
		RPS4( )1	600		197	210	645	102
		RPS4( )1	600	300	249	233	695	131
		RPS5( )1	900		249	233	705(720)	141
		RPS6( )1	1500		249	233	740	161
		RPS6( )1	1500	600	249	264	740	189
6X8	Q.R	RPS1( )1	150	150	240	241	710	147
		RPS3( )1	300		240	241	715	175
		RPS4( )1	600		246	241	745	210
		RPS4( )1	600	300	246	265	745	235
8X10	T	RPS1( )1	150	150	276	279	770	218
		RPS3( )1	300		276	279	790	256
		RPS4( )1	600		297	279	815	293
10X14	V	RPS1( )1	150	150	325	345	845	369
		RPS3( )1	300		342	345	880	418

RPS (RPSL) is certified for ASME Certification No. 27054 (27065).
(*1): For the dimension H, a pilot valve Type L, M and H is adopted.
In parentheses dimension is case of more than 12.5MPa set pressure.

3. Dimensions and weight for RPD type

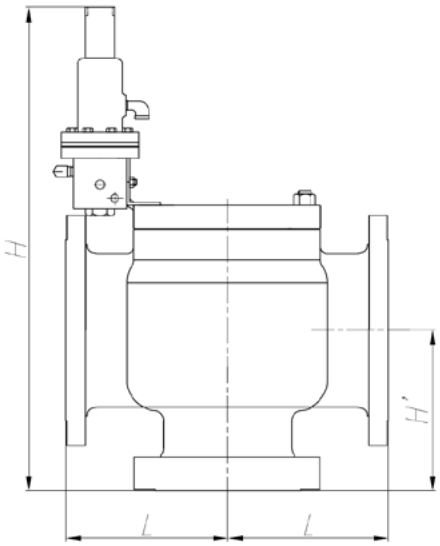

Inlet × Outlet	Orifice symbol	Type	Flange rating		Center to face			Weight (kg)
			Inlet	Outlet	H'	L	H(*1)	
8X10	7	RPD1( )1	150	150	278	291	850	374
		RPD3( )1	300		278	291	865	406
		RPD4( )1	600		299	291	905	476

RPS (RPSL) is certified for ASME Certification No. 27054 (27065).

(*1): For the dimension H, a pilot valve Type L, M and H is adopted.

4. Orifice effective area of safety valve

■ The orifice effective areas of the RP series are as follows:
The units of area are mm^2 for the upper field and in^2 for the lower, respectively.

Orifice symbol	D	E	F	G
Throat area	80.1	141.0	221.6	363.0
	0.124	0.219	0.343	0.562
API area	71.0	126.5	198.1	324.5
	0.110	0.196	0.307	0.503

Orifice symbol	H	J	K	L
Throat area	564.1	924.0	1320.2	2050.8
	0.874	1.431	2.046	3.179
API area	506.5	830.3	1185.8	1840.6
	0.785	1.287	1.838	2.853

Orifice symbol	M	N	P	Q
Throat area	2587.6	3117.2	4596.3	7932.7
	4.011	4.830	7.116	12.30
API area	2322.6	2800.0	4116.1	7129.0
	3.60	4.34	6.38	11.05

Orifice symbol	R	T	V	7
Throat area	11480	18650	28502	28502
	17.80	28.91	44.18	44.18
API area	10322.6	16774.2	—	—
	16.00	26.00	—	—

Actual area: Is our original and applied when using the measured nominal coefficient of discharge.

API area: Is the effective area of orifice specified in the API Standard 526.

Using an actual area of orifice to determine the relieving capacity of valve is allowed under API 520 Part 1, section 5.2.4.

5. Accessories

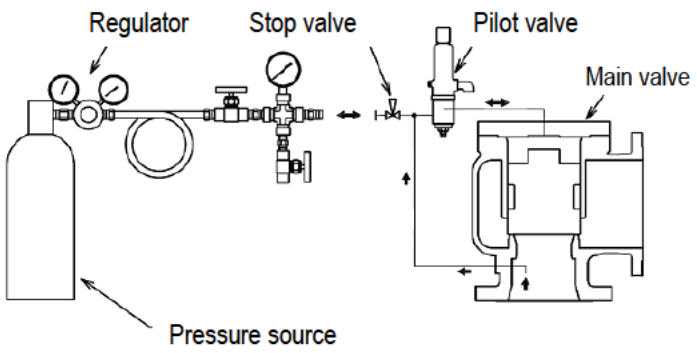

Field test connection

A field test connection is used for confirmation of the set pressure of pilot valve by utilizing other pressure source even when the primary pressure of main valve has not yet reached the set pressure.
A check valve (built in the pilot valve) is provided on the pilot valve supply pipe so that a pressurized test gas from the pressure source is prevented from entering the main-valve primary-side pipe.
(Note: The scope of work between the pressure source and the stop valve is not covered in our scope of supply.)

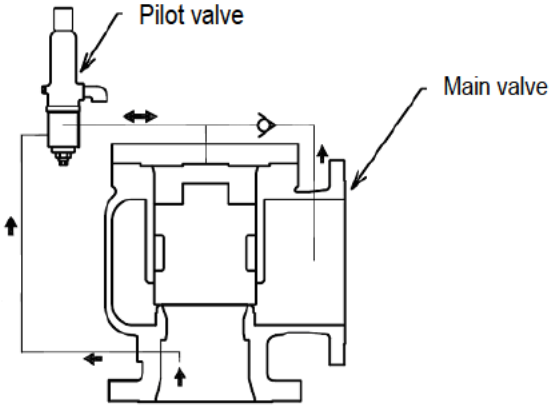

Back flow preventer

In the event that the secondary pressure of the safety valve exceeds the primary pressure, the main valve may be opened, thereby permitting counterflow, irrespective of the set pressure of pilot valve. To prevent this situation, a back flow preventer is provided.
This back flow preventer consists of two check valves (including one already built in the pilot valve) and a secondary pressure pipe.

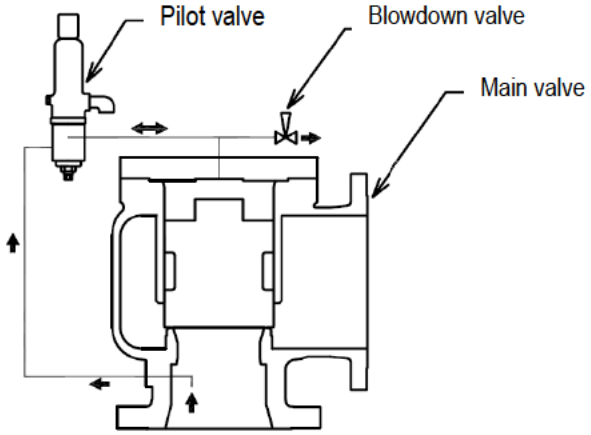

Remote blowdown valve

1. Manual blowdown valve
   This valve is intended for manual opening and closing operations of the safety valve when the primary pressure of safety valve is lower than the set pressure.
   When this manual blowdown valve is opened, the pressure inside the dome will be released, thereby opening the main valve.
2. Remote blowdown valve
   This valve is used for opening and closing operations of safety valve electrically or by means of pneumatic or hydraulic pressure for remote control.

5. Accessories

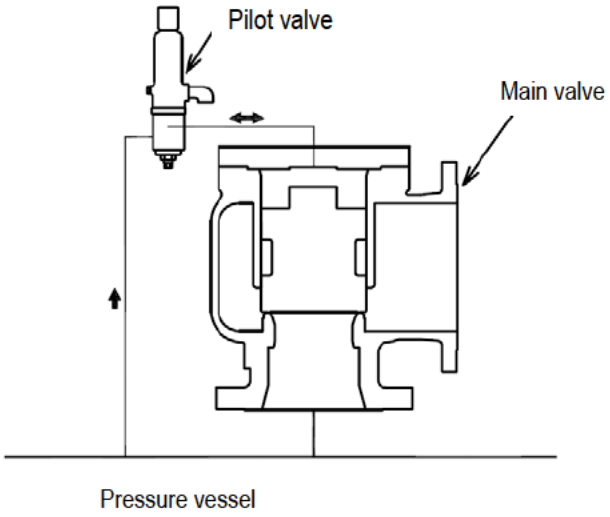

A remote pressure pick-up tube is used to introduce pressure of a pressure vessel directly to the pilot valve, as in the following cases:

1. Where blow down of safety valve is required to be smaller.
2. Where pressure loss on primary side of safety valve is larger.
3. Where pressure vessel on which safety valve is installed, is dirty inside.
4. Where safety valve is not installed on pressure vessel to be protected, for reasons of system arrangement.

Remote pressure pick-up

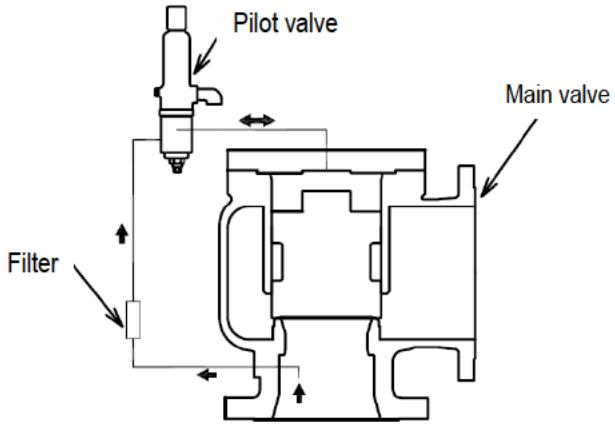

In case dust, scale, or other suspended solids are present inside the piping or the vessel, installation of a filter is required for protection of the pilot valve.
The filter element is made of a sintered metal.

Filter

6. Pressure vs. temperature standard for orifice D

Body material	Size	ASME flange Class		Maximum set pressure MPa		
				Temperature ℃		
		Inlet	Outlet	-196 to -29	-29 to 38	260
A216-WCB (Carbon steel)	1*D*2	150	150		1.96	1.17
	1*D*2	300	150		5.10	4.17
	1*D*2	600	150		10.2	8.30
	1*D*2	900	300		15.3	12.47
	1*D*2	1500	300		25.54	20.78
	1*D*2	2500	300		42.54	34.64
	1.1/2*D*2	150	150		1.96	1.17
	1.1/2*D*2	300	150		5.10	4.17
	1.1/2*D*2	600	150		10.2	8.30
	1.1/2*D*2	900	300		15.3	12.47
	1.1/2*D*2	1500	300		25.54	20.78
	1.1/2*D*2	2500	300		42.54	34.64
A351-CF8/CF8M (Austenitic stainless steel)	1*D*2	150	150	1.89	1.89	1.17
	1*D*2	300	150	4.96	4.96	3.30
	1*D*2	600	150	9.92	9.92	6.58
	1*D*2	900	300	14.89	14.89	9.89
	1*D*2	1500	300	24.82	24.82	16.47
	1*D*2	2500	300	41.36	41.36	27.44
	1.1/2*D*2	150	150	1.89	1.89	1.17
	1.1/2*D*2	300	150	4.96	4.96	3.30
	1.1/2*D*2	600	150	9.92	9.92	6.58
	1.1/2*D*2	900	300	14.89	14.89	9.89
	1.1/2*D*2	1500	300	24.82	24.82	16.47
	1.1/2*D*2	2500	300	41.37	41.37	27.44

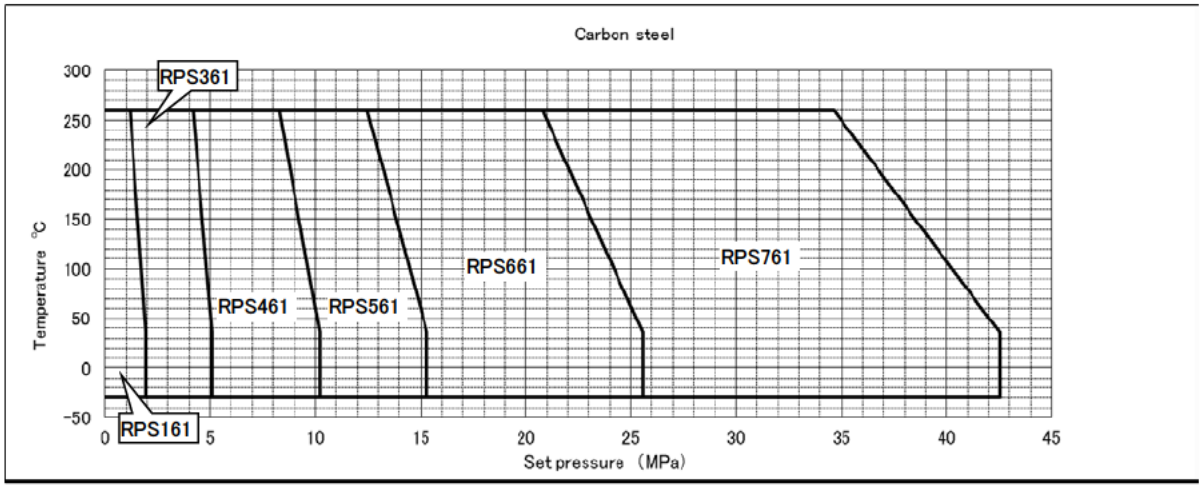

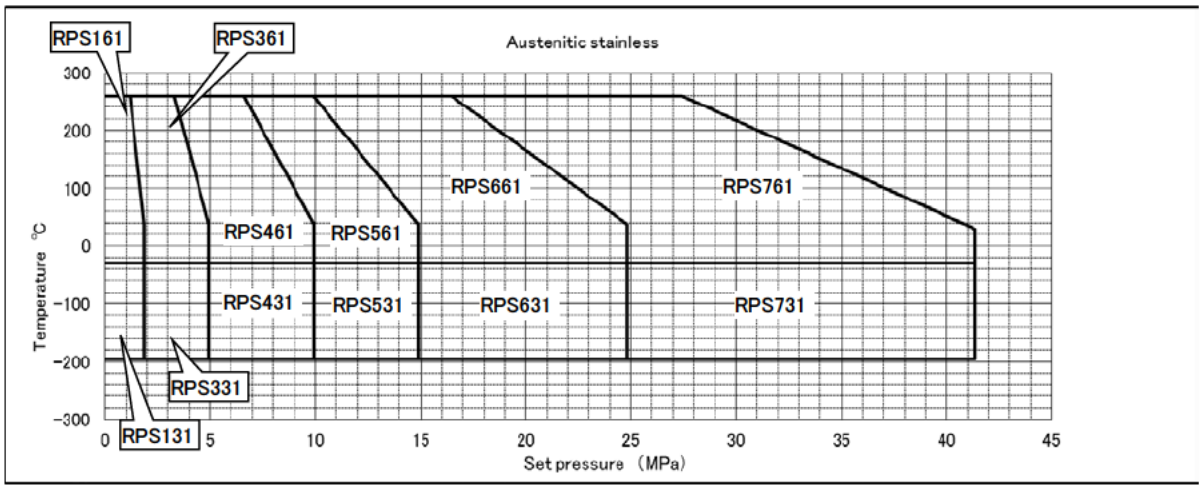

6. Pressure vs. temperature standard for orifice E

Body material	Size	ASME flange Class		Maximum set pressure MPa		
				Temperature ℃		
		Inlet	Outlet	-196 to -29	-29 to 38	260
A216-WCB (Carbon steel)	1*E*2	150	150		1.96	1.17
	1*E*2	300	150		5.10	4.17
	1*E*2	600	150		10.2	8.30
	1*E*2	900	300		15.3	12.47
	1*E*2	1500	300		25.54	20.78
	1*E*2	2500	300		42.54	34.64
	1.1/2*E*2	150	150		1.96	1.17
	1.1/2*E*2	300	150		5.10	4.17
	1.1/2*E*2	600	150		10.2	8.30
	1.1/2*E*2	900	300		15.3	12.47
	1.1/2*E*2	1500	300		25.54	20.78
	1.1/2*E*2	2500	300		42.54	34.64
A351-CF8/CF8M (Austenitic stainless steel)	1*E*2	150	150	1.89	1.89	1.17
	1*E*2	300	150	4.96	4.96	3.30
	1*E*2	600	150	9.92	9.92	6.58
	1*E*2	900	300	14.89	14.89	9.89
	1*E*2	1500	300	24.82	24.82	16.47
	1*E*2	2500	300	41.36	41.36	27.44
	1.1/2*E*2	150	150	1.89	1.89	1.17
	1.1/2*E*2	300	150	4.96	4.96	3.30
	1.1/2*E*2	600	150	9.92	9.92	6.58
	1.1/2*E*2	900	300	14.89	14.89	9.89
	1.1/2*E*2	1500	300	24.82	24.82	16.47
	1.1/2*E*2	2500	300	41.37	41.37	27.44

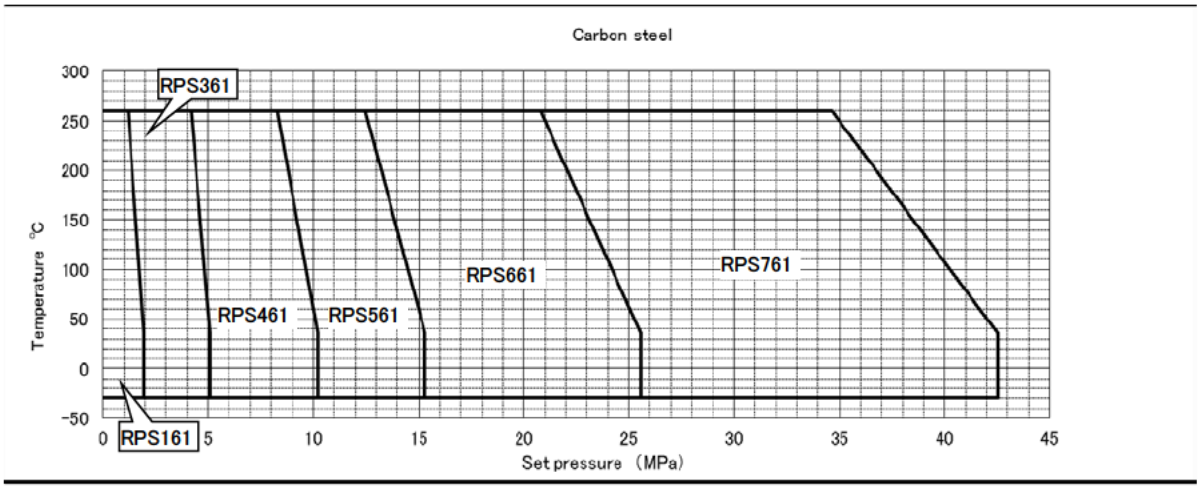

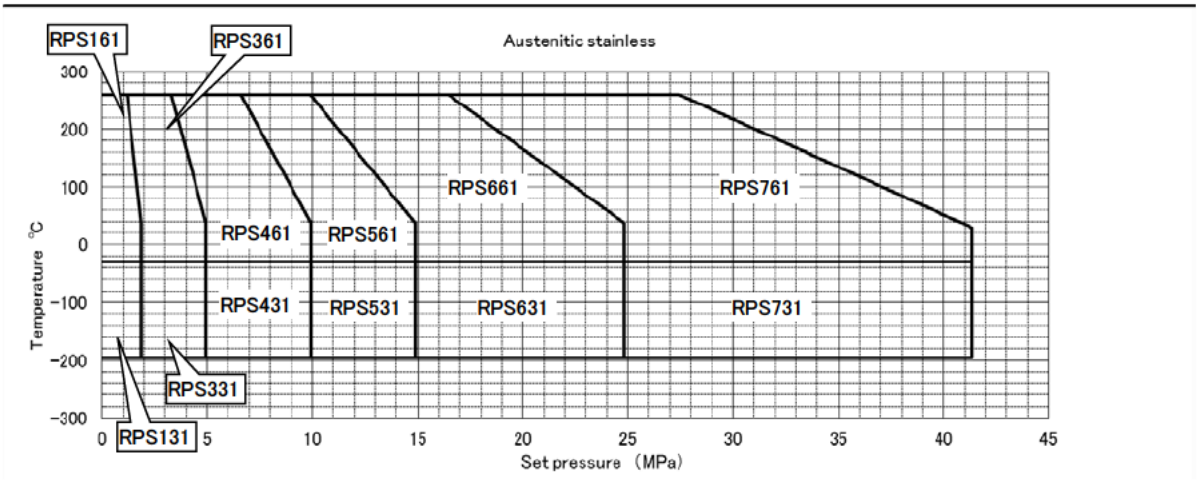

6. Pressure vs. temperature standard for orifice F

Body material	Size	ASME flange Class		Maximum set pressure MPa		
				Temperature ℃		
		Inlet	Outlet	-196 to -29	-29 to 38	260
A216-WCB (Carbon steel)	1*F*2	150	150		1.96	1.17
	1*F*2	300	150		5.10	4.17
	1*F*2	600	150		10.2	8.30
	1*F*2	900	300		15.3	12.47
	1*F*2	1500	300		25.54	20.78
	1*F*2	2500	300		42.54	34.64
	1.1/2*F*2	150	150		1.96	1.17
	1.1/2*F*2	300	150		5.10	4.17
	1.1/2*F*2	600	150		10.2	8.30
	1.1/2*F*2	900	300		15.3	12.47
	1.1/2*F*2	1500	300		25.54	20.78
	1.1/2*F*2	2500	300		42.54	34.64
A351-CF8/CF8M (Austenitic stainless steel)	1*F*2	150	150	1.89	1.89	1.17
	1*F*2	300	150	4.96	4.96	3.30
	1*F*2	600	150	9.92	9.92	6.58
	1*F*2	900	300	14.89	14.89	9.89
	1*F*2	1500	300	24.82	24.82	16.47
	1*F*2	2500	300	41.36	41.36	27.44
	1.1/2*F*2	150	150	1.89	1.89	1.17
	1.1/2*F*2	300	150	4.96	4.96	3.30
	1.1/2*F*2	600	150	9.92	9.92	6.58
	1.1/2*F*2	900	300	14.89	14.89	9.89
	1.1/2*F*2	1500	300	24.82	24.82	16.47
	1.1/2*F*2	2500	300	41.37	41.37	27.44

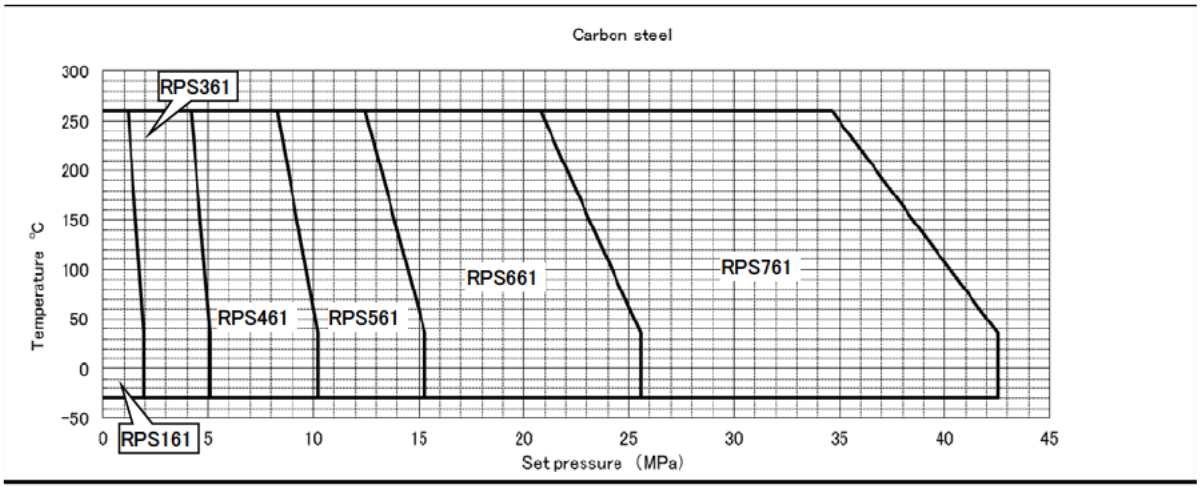

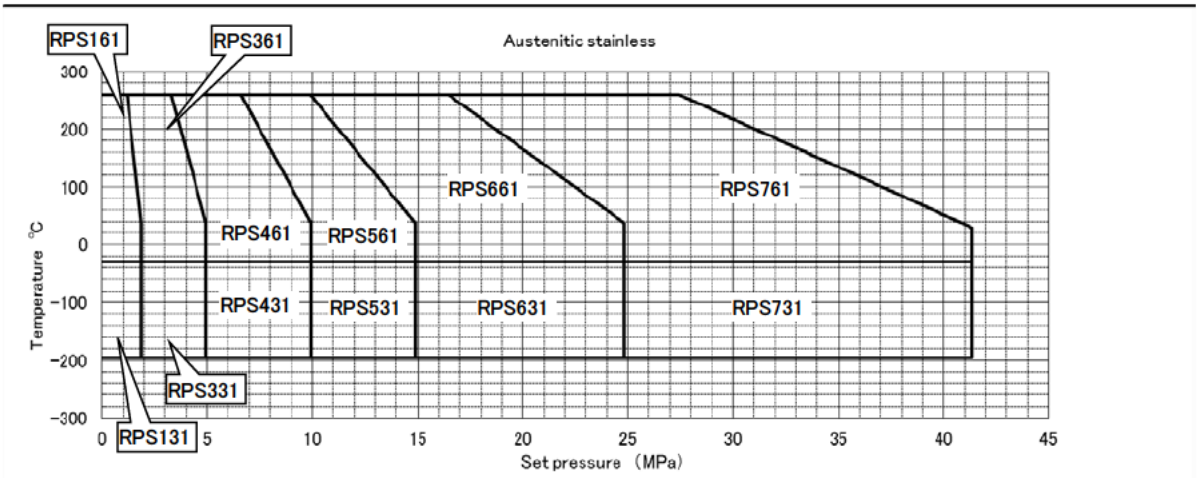

6. Pressure vs. temperature standard for orifice G

Body material	Size	ASME flange Class		Maximum set pressure MPa		
				Temperature ℃		
		Inlet	Outlet	-196 to -29	-29 to 38	260
A216-WCB (Carbon steel)	1.1/2*G*3	150	150		1.96	1.17
	1.1/2*G*3	300	150		5.10	4.17
	1.1/2*G*3	600	150		10.2	8.30
	1.1/2*G*3	900	300		15.3	12.47
	1.1/2*G*3	1500	300		25.54	20.78
	1.1/2*G*3	2500	300		42.54	34.64
	2*G*3	150	150		1.96	1.17
	2*G*3	300	150		5.10	4.17
	2*G*3	600	150		10.2	8.30
	2*G*3	900	300		15.3	12.47
	2*G*3	1500	300		25.54	20.78
	2*G*3	2500	300		42.54	34.64
A351-CF8/CF8M (Austenitic stainless steel)	1.1/2*G*3	150	150	1.89	1.89	1.17
	1.1/2*G*3	300	150	4.96	4.96	3.30
	1.1/2*G*3	600	150	9.92	9.92	6.58
	1.1/2*G*3	900	300	14.89	14.89	9.89
	1.1/2*G*3	1500	300	24.82	24.82	16.47
	1.1/2*G*3	2500	300	41.36	41.36	27.44
	2*G*3	150	150	1.89	1.89	1.17
	2*G*3	300	150	4.96	4.96	3.30
	2*G*3	600	150	9.92	9.92	6.58
	2*G*3	900	300	14.89	14.89	9.89
	2*G*3	1500	300	24.82	24.82	16.47
	2*G*3	2500	300	41.37	41.37	27.44

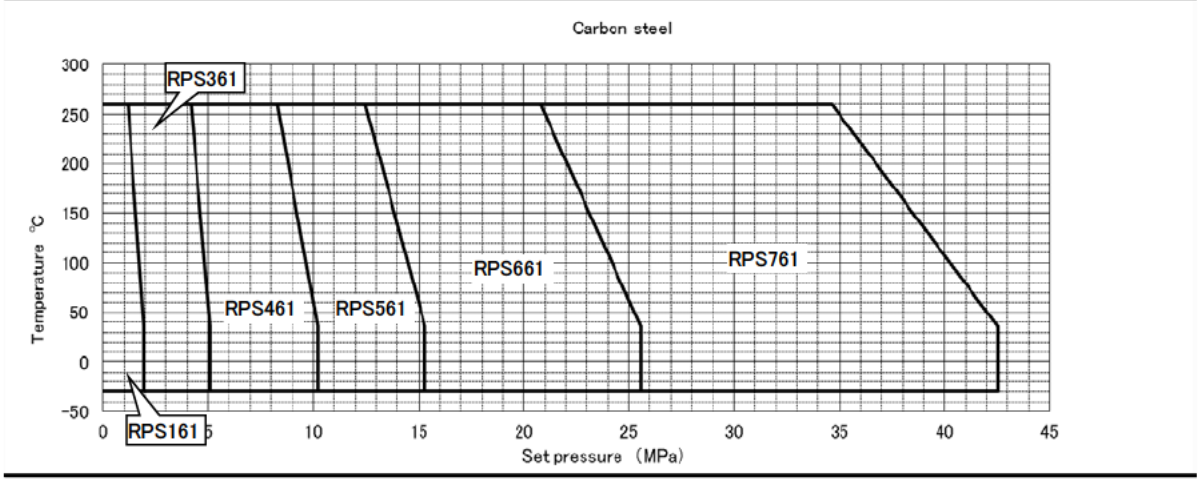

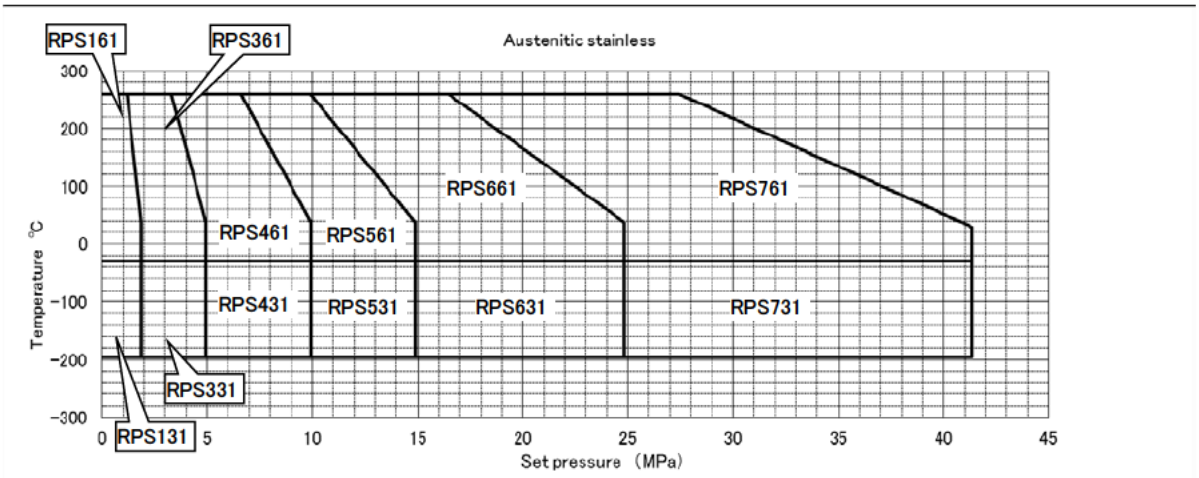

6. Pressure vs. temperature standard for orifice H

Body material	Size	ASME flange Class		Maximum set pressure MPa		
				Temperature ℃		
		Inlet	Outlet	-196 to -29	-29 to 38	260
A216-WCB (Carbon steel)	1.1/2*H*3	150	150		1.96	1.17
	1.1/2*H*3	300	150		5.10	4.17
	1.1/2*H*3	600	150		10.2	8.30
	1.1/2*H*3	900	300		15.3	12.47
	1.1/2*H*3	1500	300		25.54	20.78
	1.1/2*H*3	2500	300		42.54	34.64
	2*H*3	150	150		1.96	1.17
	2*H*3	300	150		5.10	4.17
	2*H*3	600	150		10.2	8.30
	2*H*3	900	300		15.3	12.47
	2*H*3	1500	300		25.54	20.78
	2*H*3	2500	300		42.54	34.64
A351-CF8/CF8M (Austenitic stainless steel)	1.1/2*H*3	150	150	1.89	1.89	1.17
	1.1/2*H*3	300	150	4.96	4.96	3.30
	1.1/2*H*3	600	150	9.92	9.92	6.58
	1.1/2*H*3	900	300	14.89	14.89	9.89
	1.1/2*H*3	1500	300	24.82	24.82	16.47
	1.1/2*H*3	2500	300	41.36	41.36	27.44
	2*H*3	150	150	1.89	1.89	1.17
	2*H*3	300	150	4.96	4.96	3.30
	2*H*3	600	150	9.92	9.92	6.58
	2*H*3	900	300	14.89	14.89	9.89
	2*H*3	1500	300	24.82	24.82	16.47
	2*H*3	2500	300	41.37	41.37	27.44

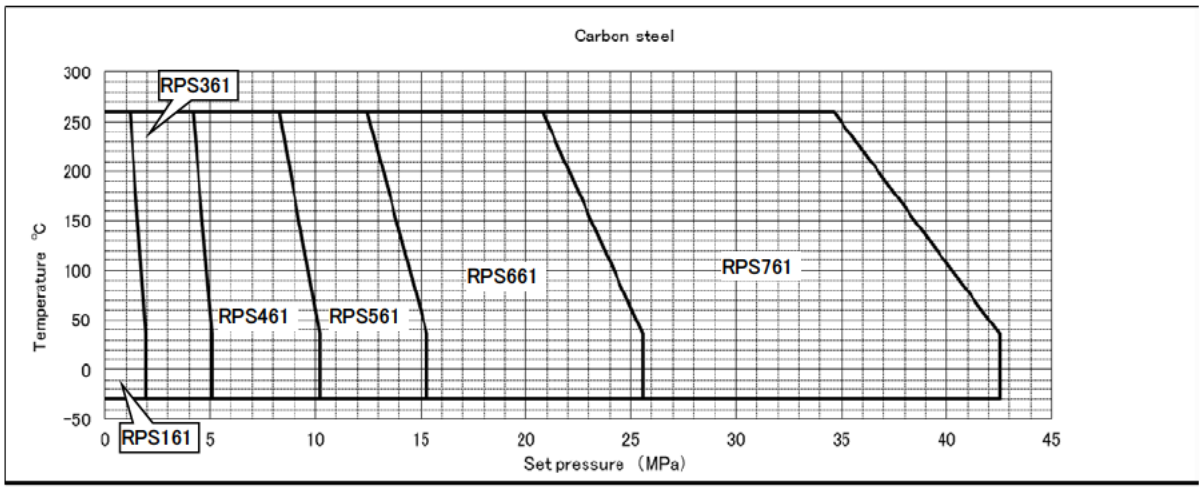

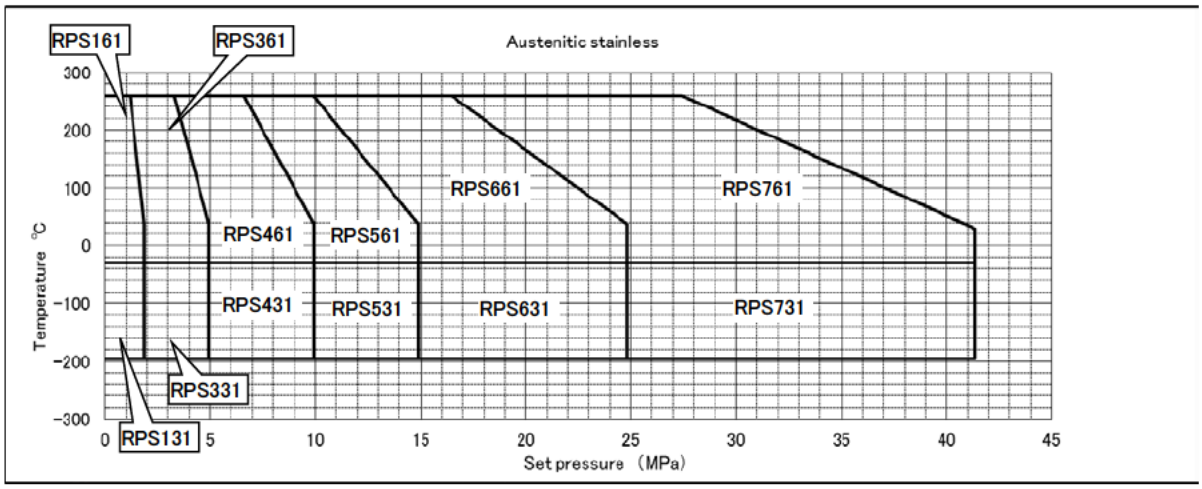

6. Pressure vs. temperature standard for orifice J

Body material	Size	ASME flange Class		Maximum set pressure MPa		
				Temperature ℃		
		Inlet	Outlet	-196 to -29	-29 to 38	260
A216-WCB (Carbon steel)	2*J*3	150	150		1.96	1.17
	2*J*3	300	150		5.10	4.17
	2*J*3	600	150		10.2	8.30
	2*J*3	900	300		15.3	12.47
	2*J*3	1500	300		25.54	20.78
	2*J*3	2500	300		31.85	31.85
	3*J*4	150	150		1.96	1.17
	3*J*4	300	150		5.10	4.17
	3*J*4	600	150		10.2	8.30
	3*J*4	900	300		15.3	12.47
	3*J*4	1500	300		25.54	20.78
A351-CF8/CF8M (Austenitic stainless steel)	2*J*3	150	150	1.89	1.89	1.17
	2*J*3	300	150	4.96	4.96	3.30
	2*J*3	600	150	9.92	9.92	6.58
	2*J*3	900	300	14.89	14.89	9.89
	2*J*3	1500	300	24.82	24.82	16.47
	2*J*3	2500	300	30.99	30.99	24.47
	3*J*4	150	150	1.89	1.89	1.17
	3*J*4	300	150	4.96	4.96	3.30
	3*J*4	600	150	9.92	9.92	6.58
	3*J*4	900	300	14.89	14.89	9.89
	3*J*4	1500	300	24.82	24.82	16.47

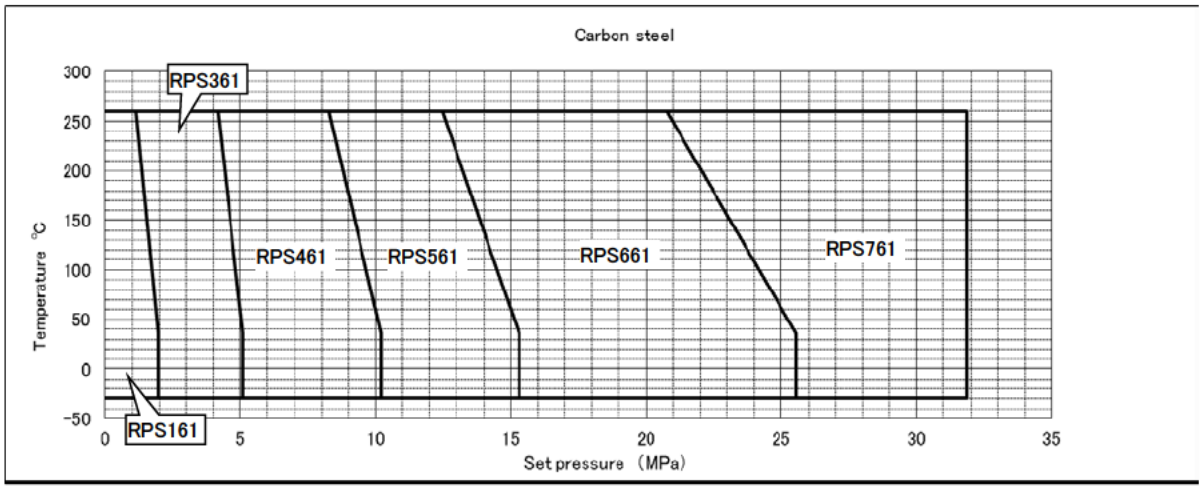

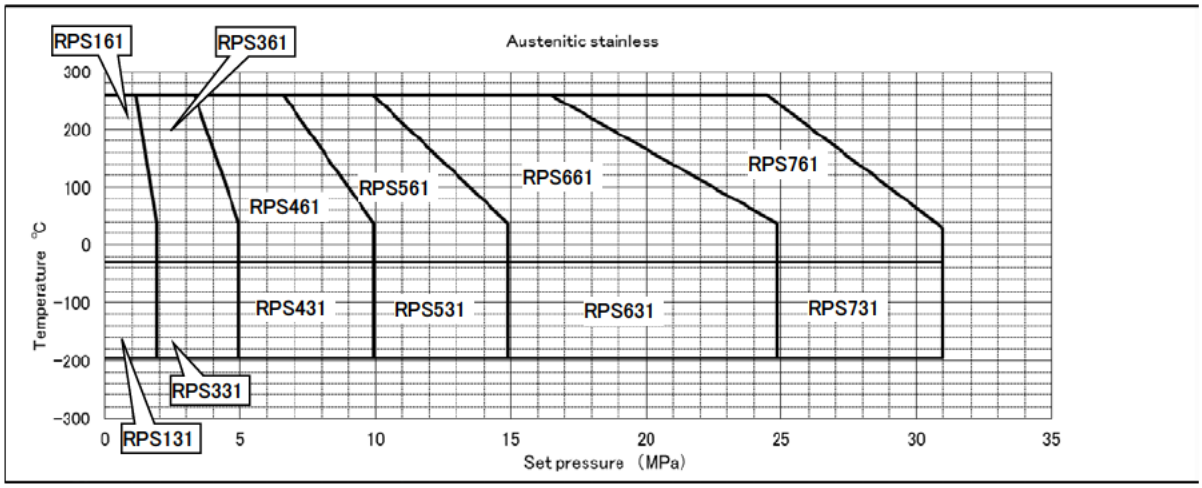

6. Pressure vs. temperature standard for orifice K

Body material	Size	ASME flange Class		Maximum set pressure MPa		
				Temperature ℃		
		Inlet	Outlet	-196 to -29	-29 to 38	260
A216-WCB (Carbon steel)	3*K*4	150	150		1.96	1.17
	3*K*4	300	150		5.10	4.17
	3*K*4	600	150		10.2	8.30
	3*K*4	900	300		15.3	12.47
	3*K*4	1500	300		25.54	20.78
A351-CF8/CF8M (Austenitic stainless steel)	3*K*4	150	150	1.89	1.89	1.17
	3*K*4	300	150	4.96	4.96	3.30
	3*K*4	600	150	9.92	9.92	6.58
	3*K*4	900	300	14.89	14.89	9.89
	3*K*4	1500	300	24.82	24.82	16.47

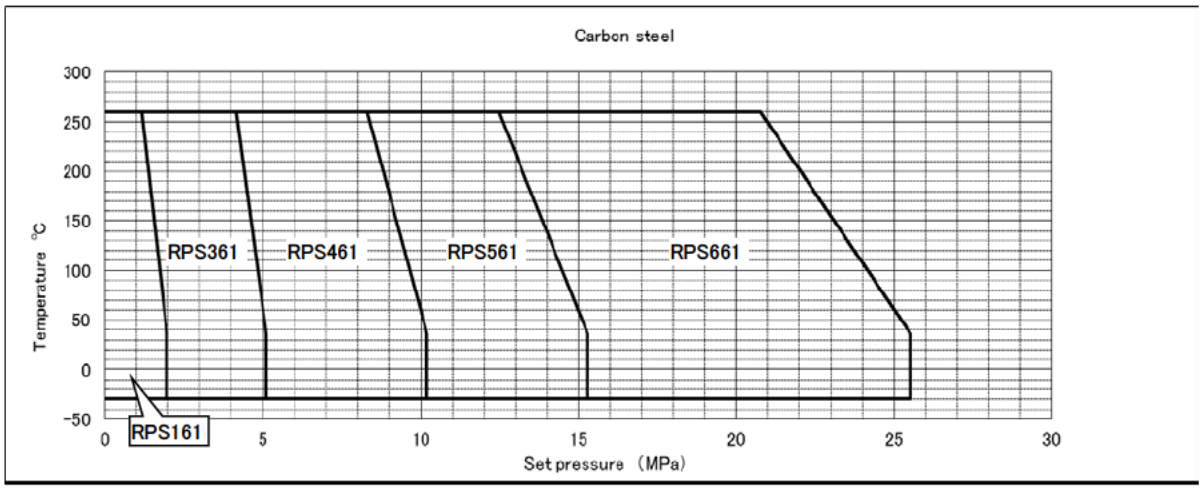

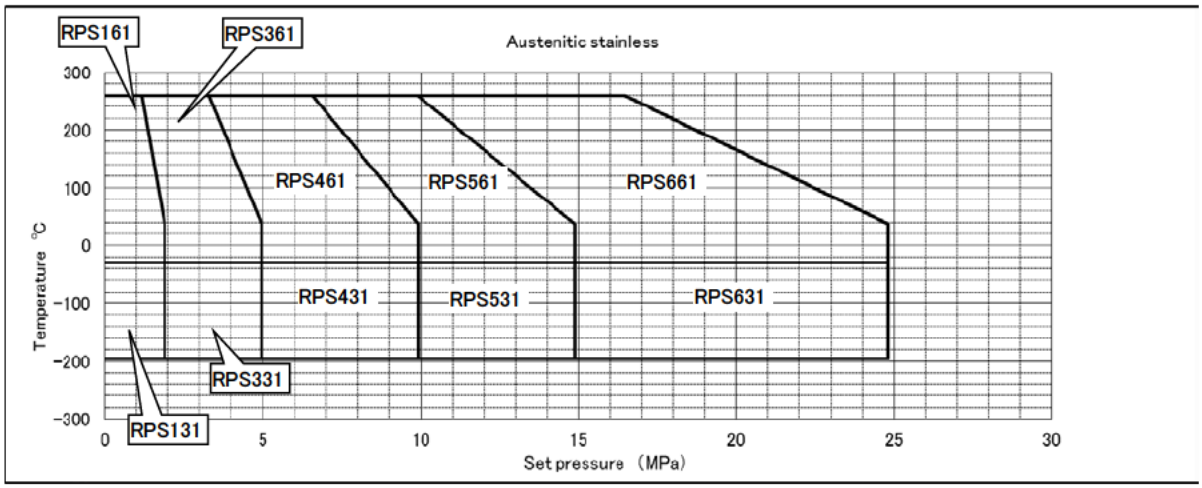

6. Pressure vs. temperature standard for orifice L

Body material	Size	ASME flange Class		Maximum set pressure MPa		
				Temperature ℃		
		Inlet	Outlet	-196 to -29	-29 to 38	260
A216-WCB (Carbon steel)	3*L*4	150	150		1.96	1.17
	3*L*4	300	150		5.10	4.17
	3*L*4	600	150		9.82	8.30
	3*L*4	900	300		15.3	12.47
	3*L*4	1500	300		25.02	20.78
	4*L*6	150	150		1.96	1.17
	4*L*6	300	150		5.10	4.17
	4*L*6	600	150/300		10.2	8.30
	4*L*6	900	300		15.3	12.47
	4*L*6	1500	300/600		25.54	20.78
A351-CF8/CF8M (Austenitic stainless steel)	3*L*4	150	150	1.89	1.89	1.17
	3*L*4	300	150	4.96	4.96	3.30
	3*L*4	600	150	8.27	9.48	6.58
	3*L*4	900	300	14.89	14.89	9.89
	3*L*4	1500	300	24.33	24.33	16.47
	4*L*6	150	150	1.89	1.89	1.17
	4*L*6	300	150	4.96	4.96	3.30
	4*L*6	600	150/300	9.92	9.92	6.58
	4*L*6	900	300	14.89	14.89	9.89
	4*L*6	1500	300/600	24.82	24.82	16.47

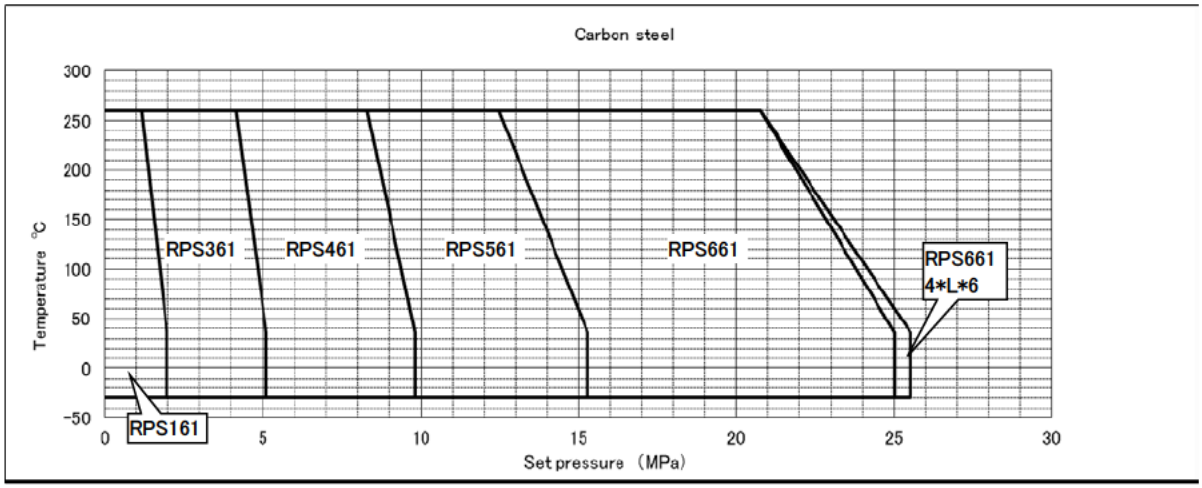

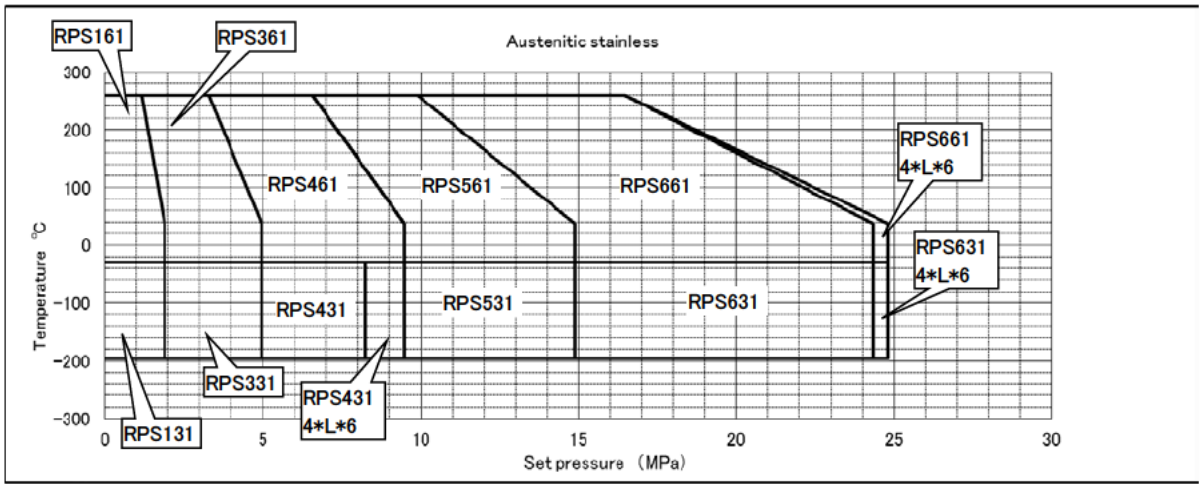

6. Pressure vs. temperature standard for orifice M

Body material	Size	ASME flange Class		Maximum set pressure MPa		
				Temperature ℃		
		Inlet	Outlet	-196 to -29	-29 to 38	260
A216-WCB (Carbon steel)	4*M*6	150	150		1.96	1.17
	4*M*6	300	150		5.10	4.17
	4*M*6	600	150/300		10.2	8.30
	4*M*6	900	300		15.3	12.47
	4*M*6	1500	300/600		25.54	20.78
A351-CF8/CF8M (Austenitic stainless steel)	4*M*6	150	150	1.89	1.89	1.17
	4*M*6	300	150	4.96	4.96	3.30
	4*M*6	600	150/300	9.92	9.92	6.58
	4*M*6	900	300	14.89	14.89	9.89
	4*M*6	1500	300/600	24.82	24.82	16.47

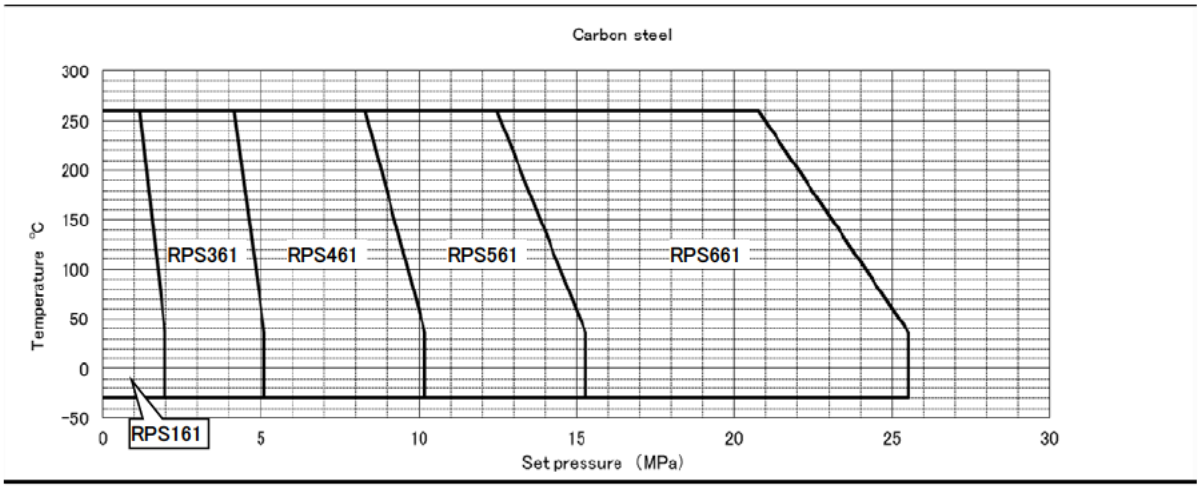

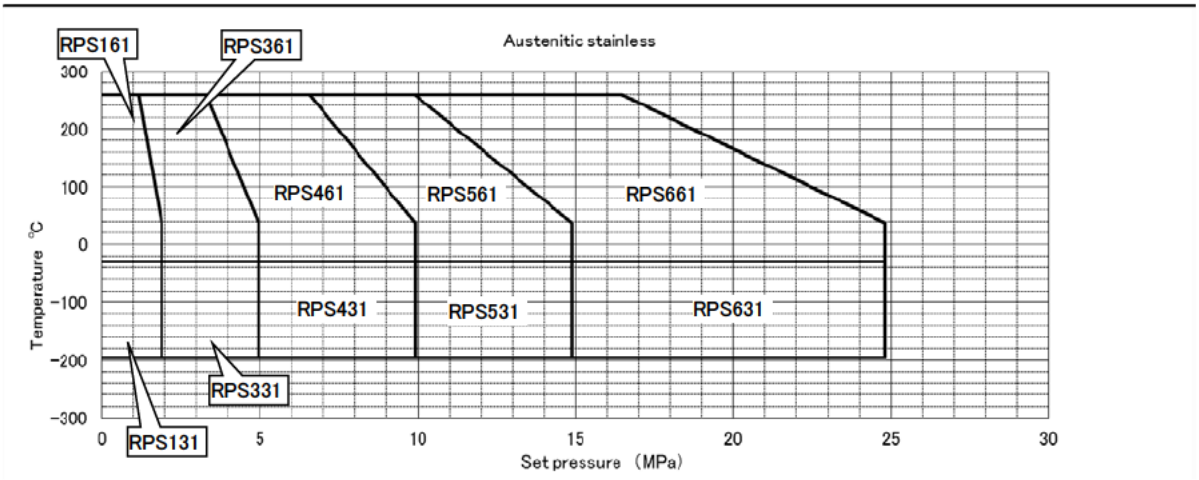

6. Pressure vs. temperature standard for orifice N

Body material	Size	ASME flange Class		Maximum set pressure MPa		
				Temperature ℃		
		Inlet	Outlet	-196 to -29	-29 to 38	260
A216-WCB (Carbon steel)	4*N*6	150	150		1.96	1.17
	4*N*6	300	150		5.10	4.17
	4*N*6	600	150/300		10.2	8.30
	4*N*6	900	300		15.3	12.47
	4*N*6	1500	300/600		25.54	20.78
A351-CF8/CF8M Austenitic stainless steel	4*N*6	150	150	1.89	1.89	1.17
	4*N*6	300	150	4.96	4.96	3.30
	4*N*6	600	150/300	9.92	9.92	6.58
	4*N*6	900	300	14.89	14.89	9.89
	4*N*6	1500	300/600	24.82	24.82	16.47

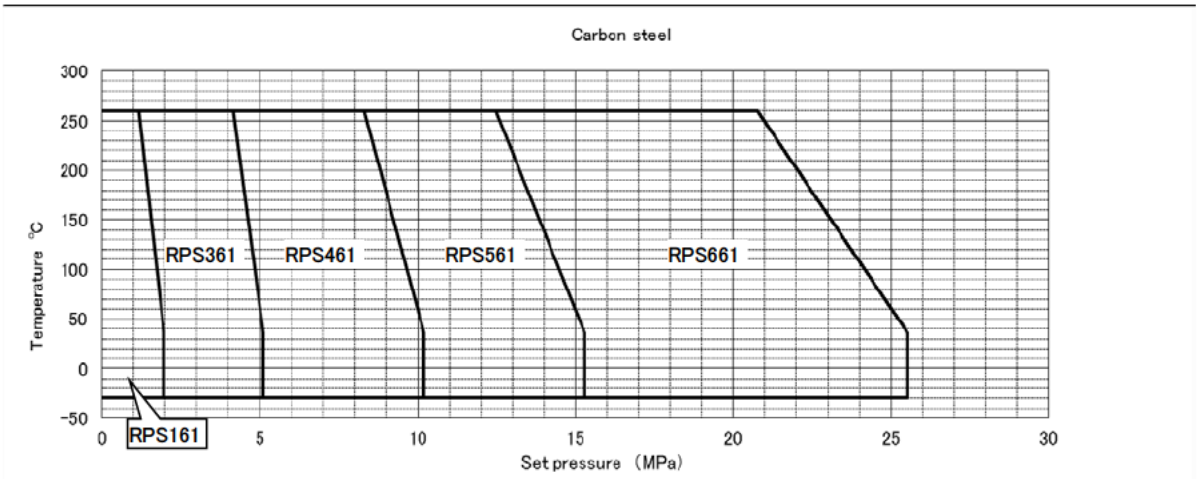

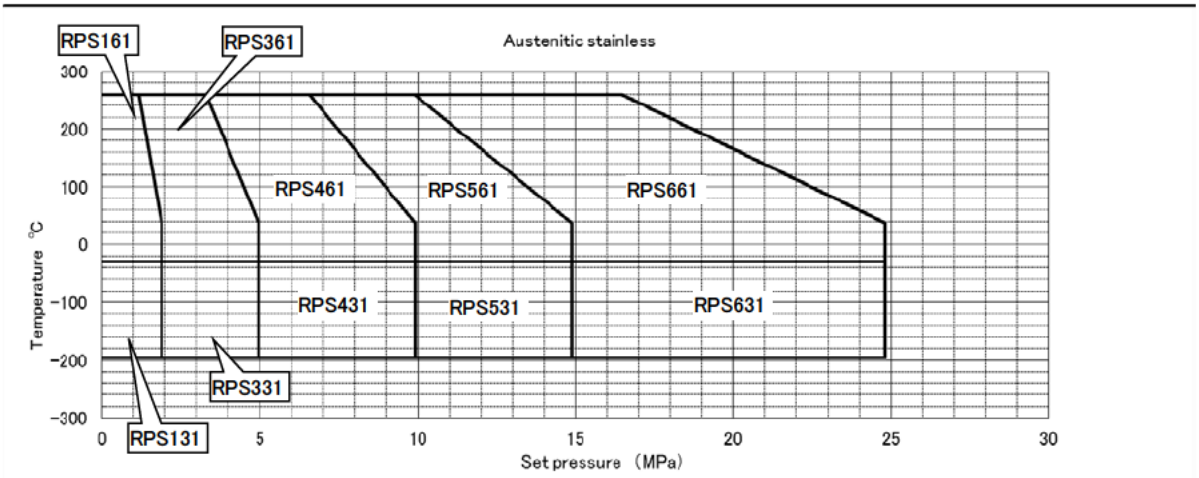

6. Pressure vs. temperature standard for orifice P

Body material	Size	ASME flange Class		Maximum set pressure MPa		
				Temperature ℃		
		Inlet	Outlet	-196 to -29	-29 to 38	260
A216-WCB (Carbon steel)	4*P*6	150	150		1.96	1.17
	4*P*6	300	150		5.10	4.17
	4*P*6	600	150		9.82	8.30
	4*P*6	600	300		10.2	8.30
	4*P*6	900	300		15.3	12.47
	4*P*6	1500	300		25.02	20.78
	4*P*6	1500	600		25.54	20.78
A351-CF8/CF8M (Austenitic stainless steel)	4*P*6	150	150	1.89	1.89	1.17
	4*P*6	300	150	4.96	4.96	3.30
	4*P*6	600	150/300	9.92	9.92	6.58
	4*P*6	900	300	14.89	14.89	9.89
	4*P*6	1500	300/600	24.82	24.82	16.47

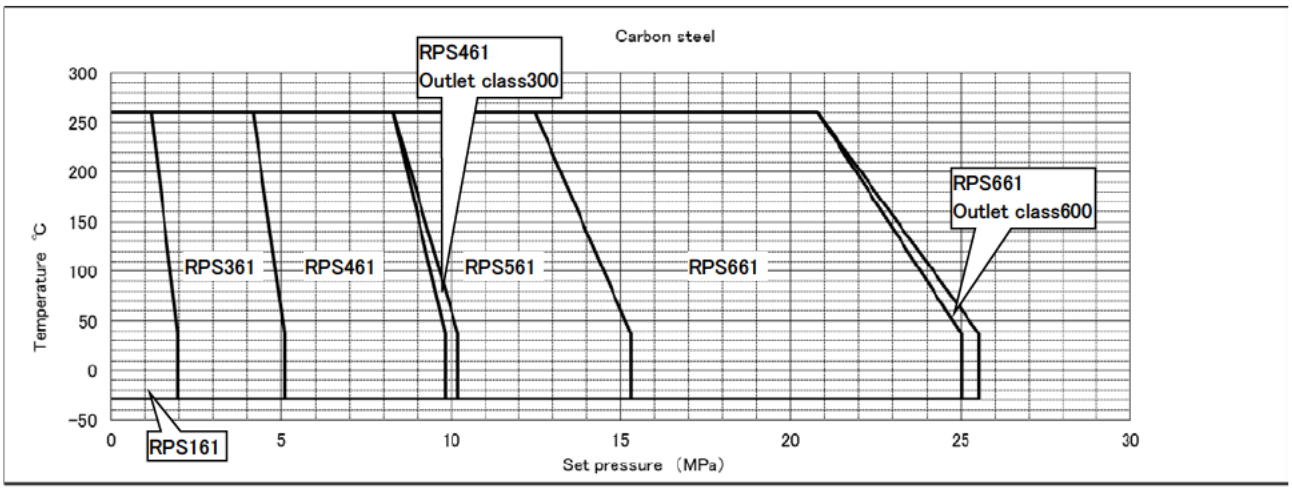

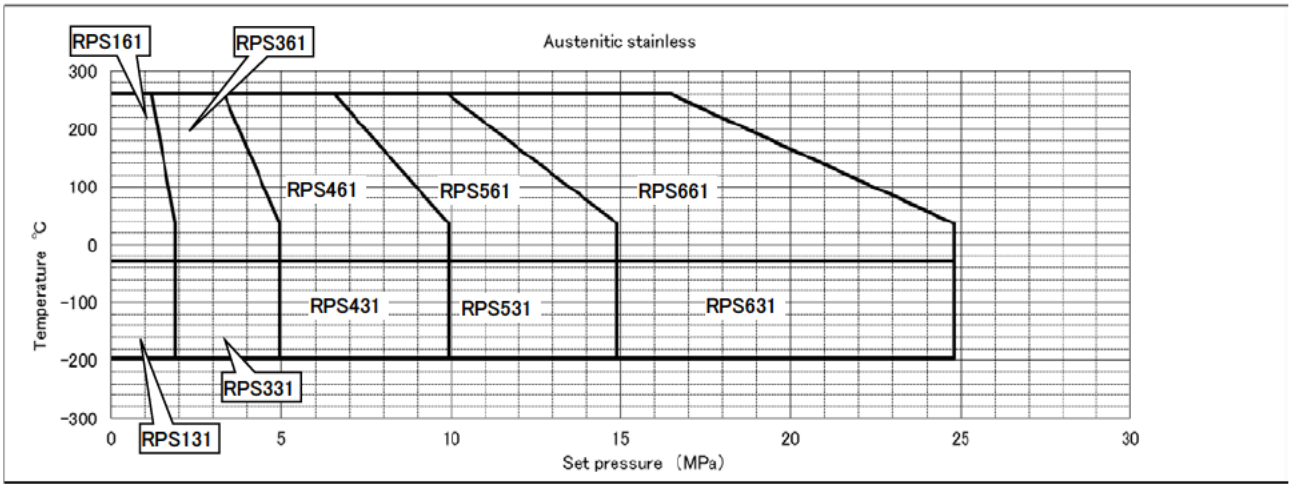

6. Pressure vs. temperature standard for orifice Q

Body material	Size	ASME flange Class		Maximum set pressure MPa		
				Temperature ℃		
		Inlet	Outlet	-196 to -29	-29 to 38	260
A216-WCB (Carbon steel)	6*Q*8	150	150		1.96	1.17
	6*Q*8	300	150		5.10	4.17
	6*Q*8	600	150		9.99	8.30
	6*Q*8	600	300		10.2	8.30
A351-CF8/CF8M (Austenitic stainless steel)	6*Q*8	150	150	1.89	1.89	1.17
	6*Q*8	300	150	4.96	4.96	3.30
	6*Q*8	600	150	9.65	9.65	6.58
	6*Q*8	600	300	9.92	9.92	6.58

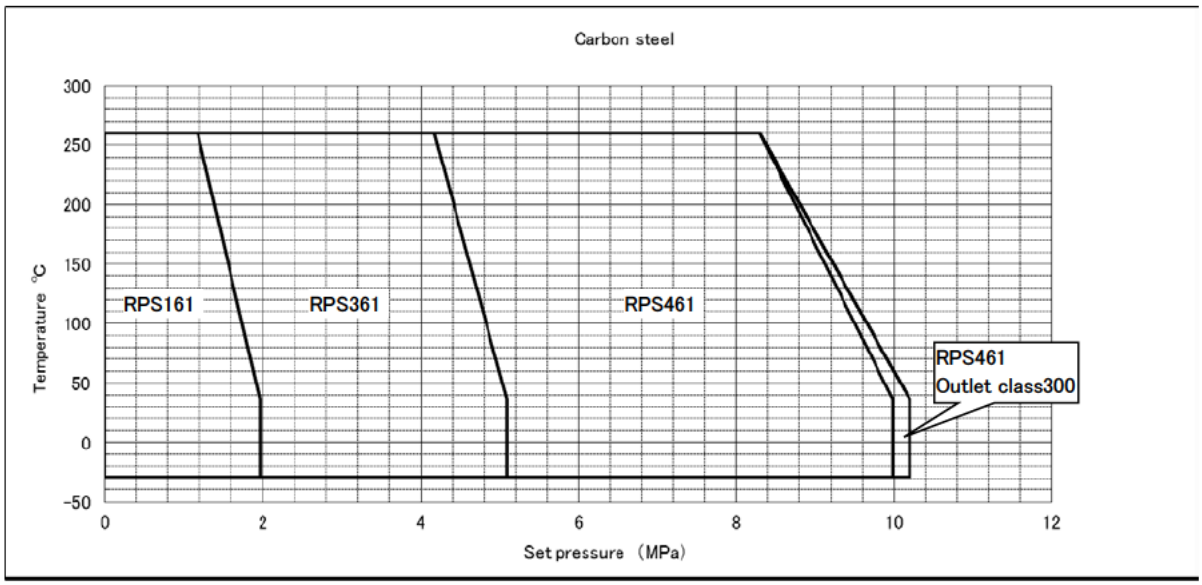

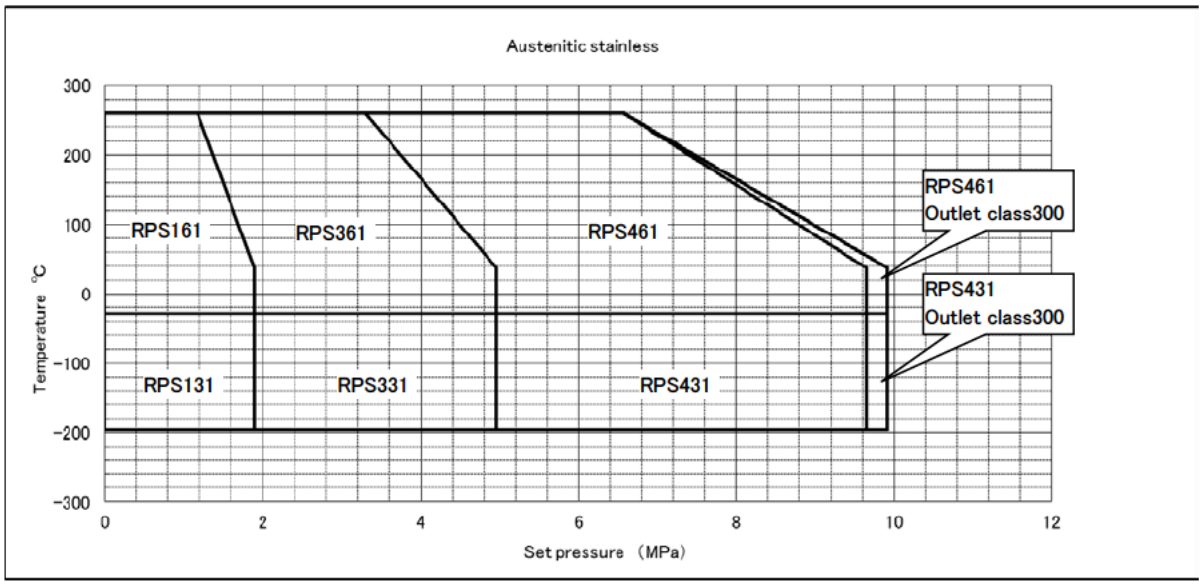

6. Pressure vs. temperature standard for orifice R

Body material	Size	ASME flange Class		Maximum set pressure MPa		
				Temperature ℃		
		Inlet	Outlet	-196 to -29	-29 to 38	260
A216-WCB (Carbon steel)	6*R*8	150	150		1.96	1.17
	6*R*8	300	150		5.10	4.13
	6*R*8	600	150/300		7.03	7.03
A351-CF8/CF8M (Austenitic stainless steel)	6*R*8	150	150	1.89	1.89	1.17
	6*R*8	300	150	4.96	4.96	3.30
	6*R*8	600	150/300	6.79	6.79	6.58

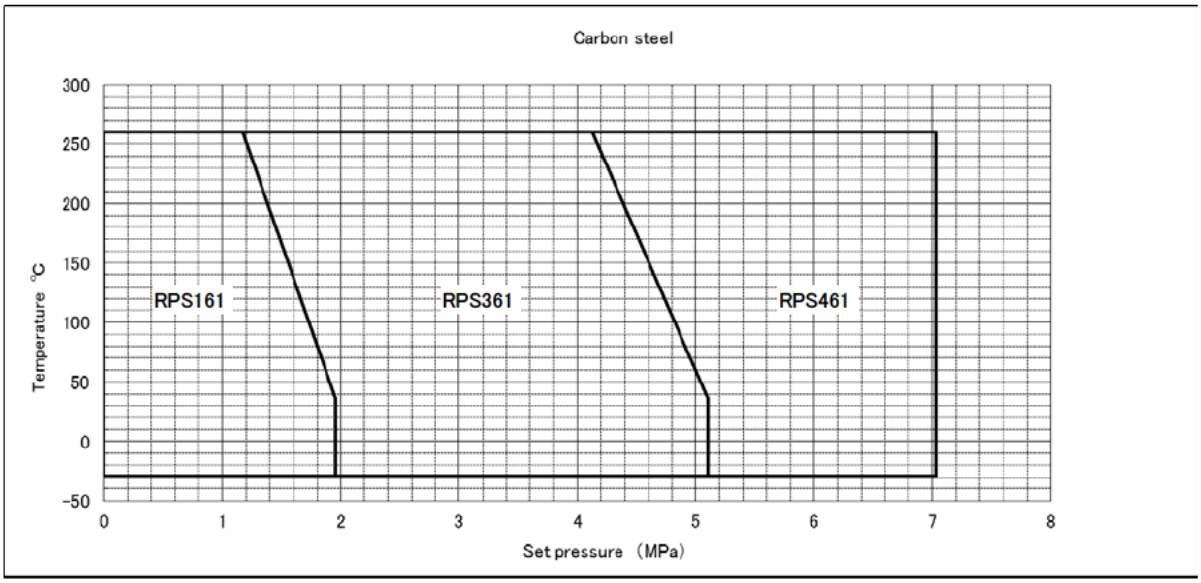

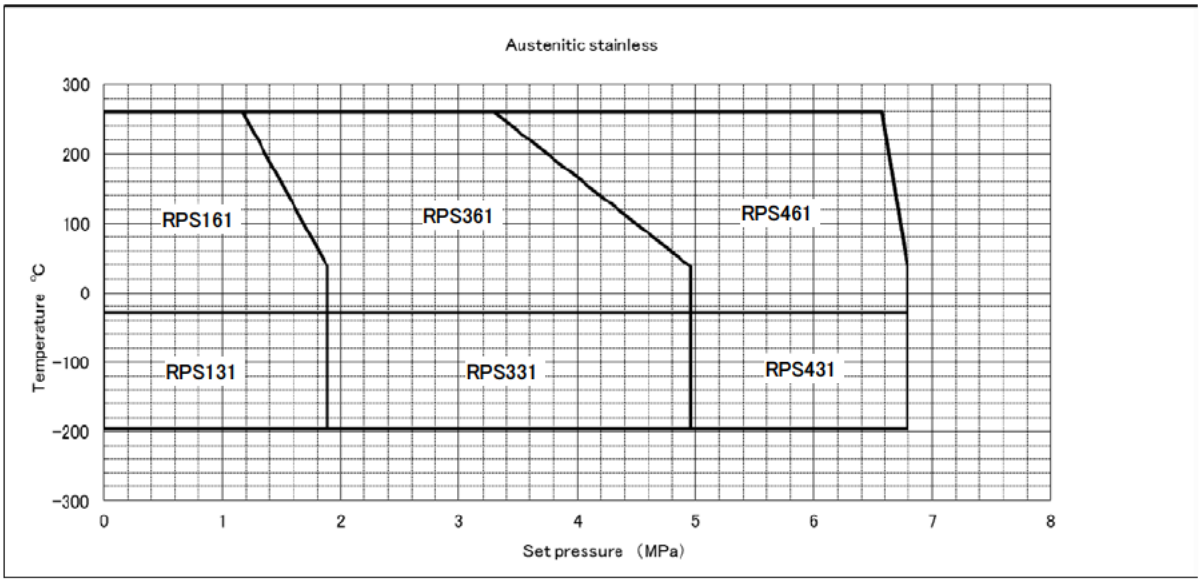

6. Pressure vs. temperature standard for orifice T

Body material	Size	ASME flange Class		Maximum set pressure MPa		
				Temperature ℃		
		Inlet	Outlet	-196 to -29	-29 to 38	260
A216-WCB (Carbon steel)	8*T*10	150	150		1.96	1.17
	8*T*10	300	150		5.10	4.13
	8*T*10	600	150		6.79	6.79
A351-CF8/CF8M (Austenitic stainless steel)	8*T*10	150	150	1.89	1.89	1.17
	8*T*10	300	150	4.96	4.96	3.30
	8*T*10	600	150	6.55	6.55	6.55

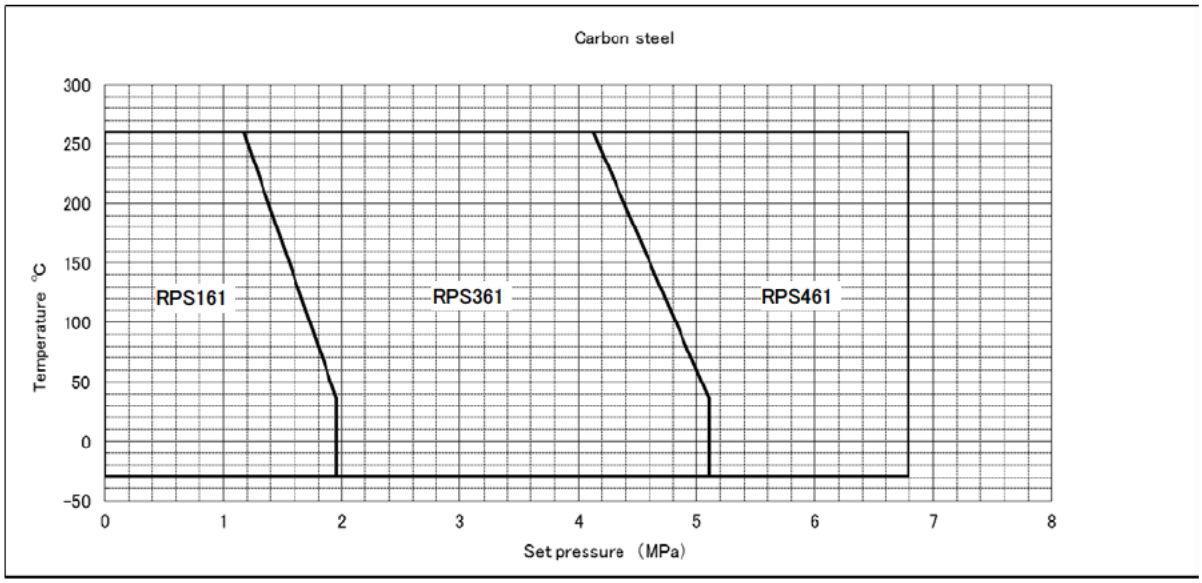

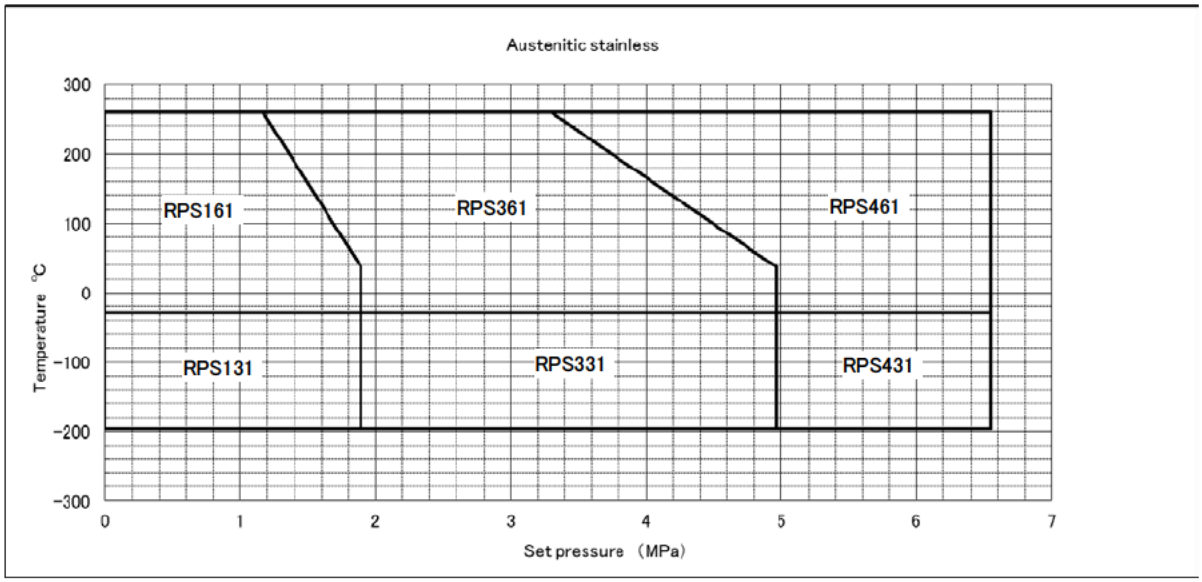

6. Pressure vs. temperature standard for orifice V

Body material	Size	ASME flange Class		Maximum set pressure MPa		
				Temperature ℃		
		Inlet	Outlet	-196 to -29	-29 to 38	260
A216-WCB (Carbon steel)	10*V*14	150	150		1.96	1.17
	10*V*14	300	150		5.10	4.13
A351-CF8/CF8M (Austenitic stainless steel)	10*V*14	150	150	1.89	1.89	1.17
	10*V*14	300	150	4.96	4.96	3.30

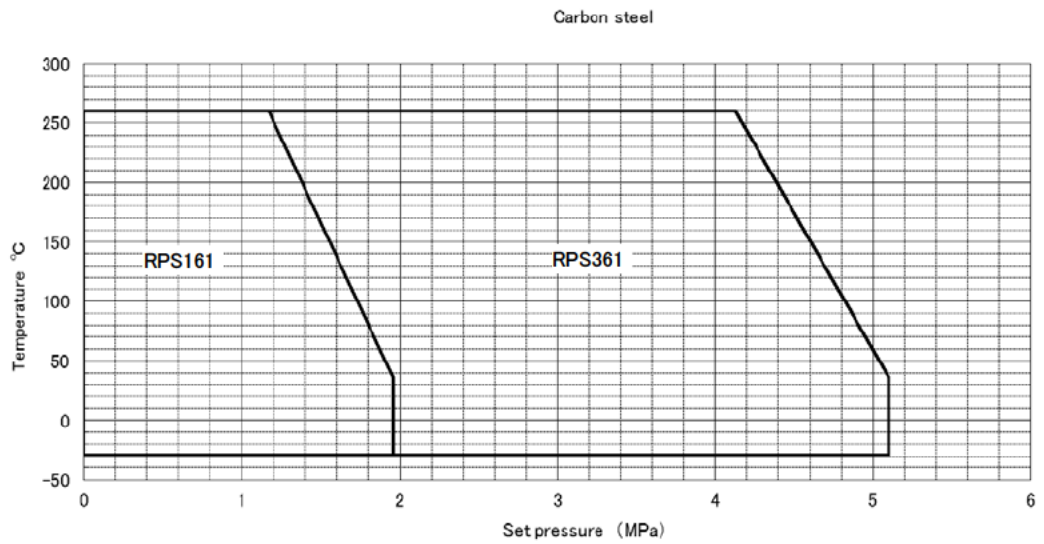

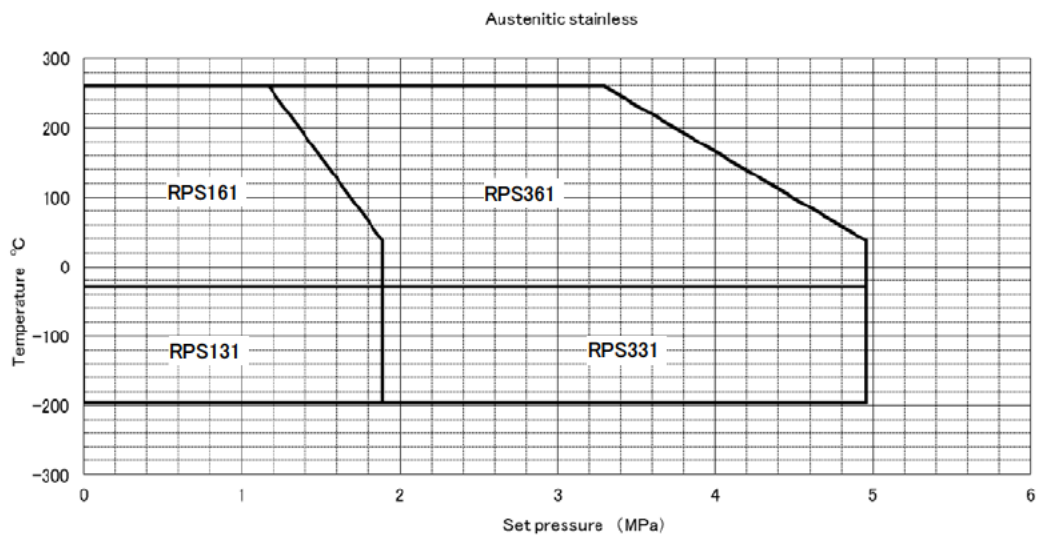

6. Pressure vs. temperature standard for orifice 7

Body material	Size	ASME flange Class		Maximum set pressure MPa		
				Temperature ℃		
		Inlet	Outlet	-196 to -29	-29 to 38	260
A216-WCB (Carbon steel)	8*7*10	150	150		1.96	1.17
	8*7*10	300	150		5.10	4.13
	8*7*10	600	150		6.79	6.79
A351-CF8/CF8M (Austenitic stainless steel)	8*7*10	150	150	1.89	1.89	1.17
	8*7*10	300	150	4.96	4.96	3.30
	8*7*10	600	150	6.55	6.55	6.55

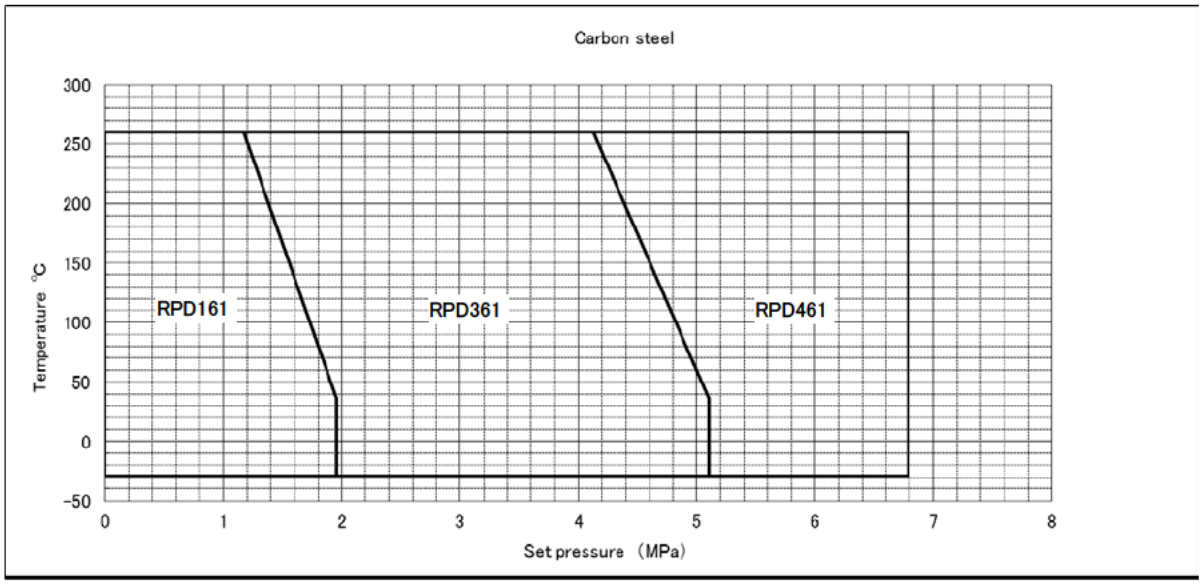

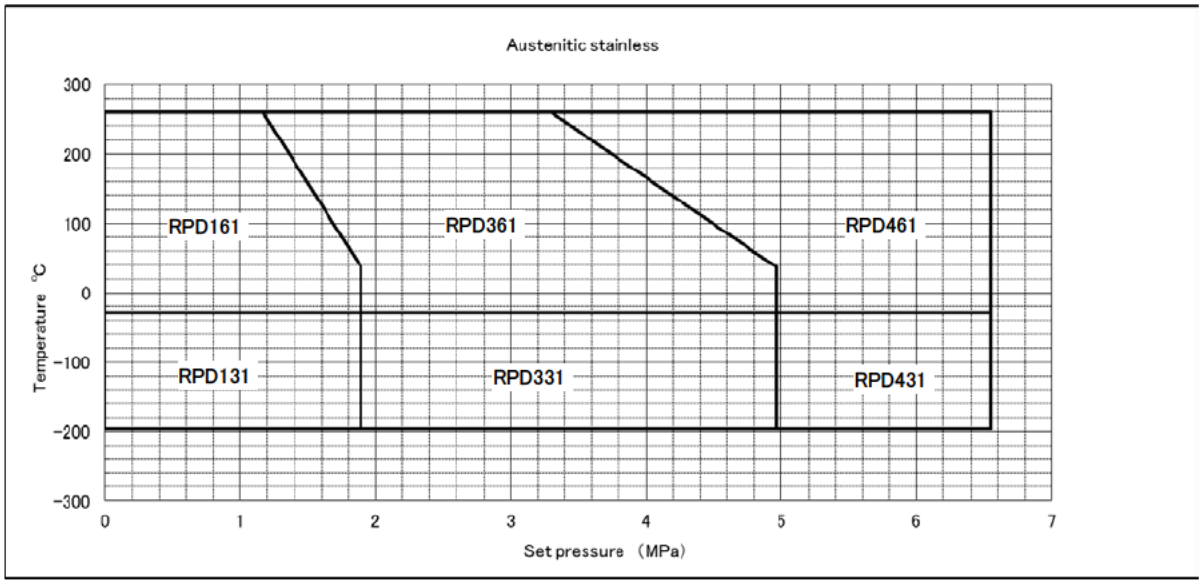

RTE Series
for resources development field

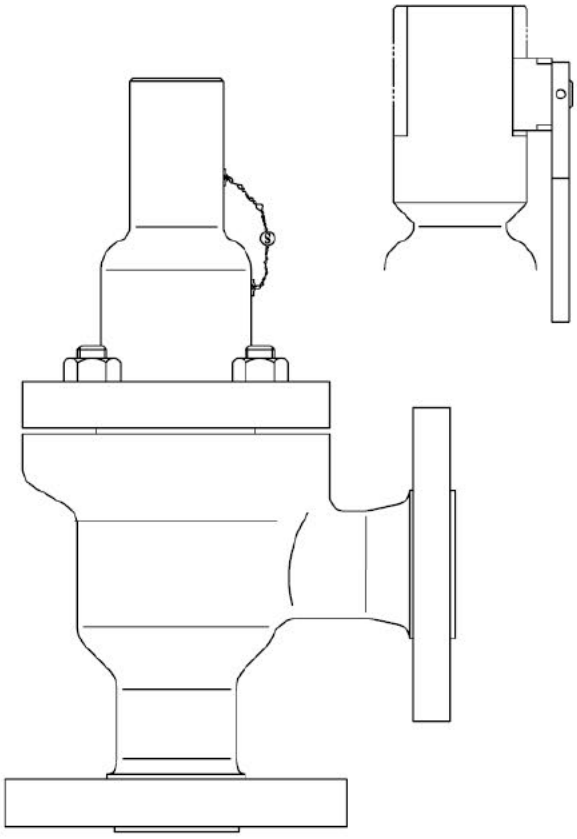

FUKUI SEISAKUSHO CO., LTD.

Type code

■ Type code system

Our type code system is as follows and should be used for selection.

RTE 1 6 1 – S1 – FN (A)

Symbol1 : Series name

Symbol2 : Pressure class, inlet flange rating code

Code	Rating (ASME,JPI)	JIS rating
1	150	10K
2	–	20K
3	300	30K
4	600	–

Symbol3 : Temperature code

Code	Temperature range ℃
6	-29～232
5	-59.4～-29
4	-101.1～-59.4
3	-196～-101.1

Symbol4 : Inlet connection code

Code	Connection code
1	ASME flange
2	JPI flange
4	JIS flange

Symbol6 : Nozzle structure

Code	Nozzle
Blank	Semi nozzle
FN	Full nozzle

Symbol7 : Cap code

Code	Test gag	Lever
A	No	No
B	Yes	No
M	No	Yes
N	Yes	Yes

Symbol5 : Material code

Indicates body/bonnet material.

You may select any combination of body and major-section materials from the following tables:

Code	Body material	
Blank	WCB	SCPH2
S	CF8	SCS13A
S1	CF8M	SCS14A
C5	LCB	SCPL1

Parts name and standard materials

・Semi nozzle type

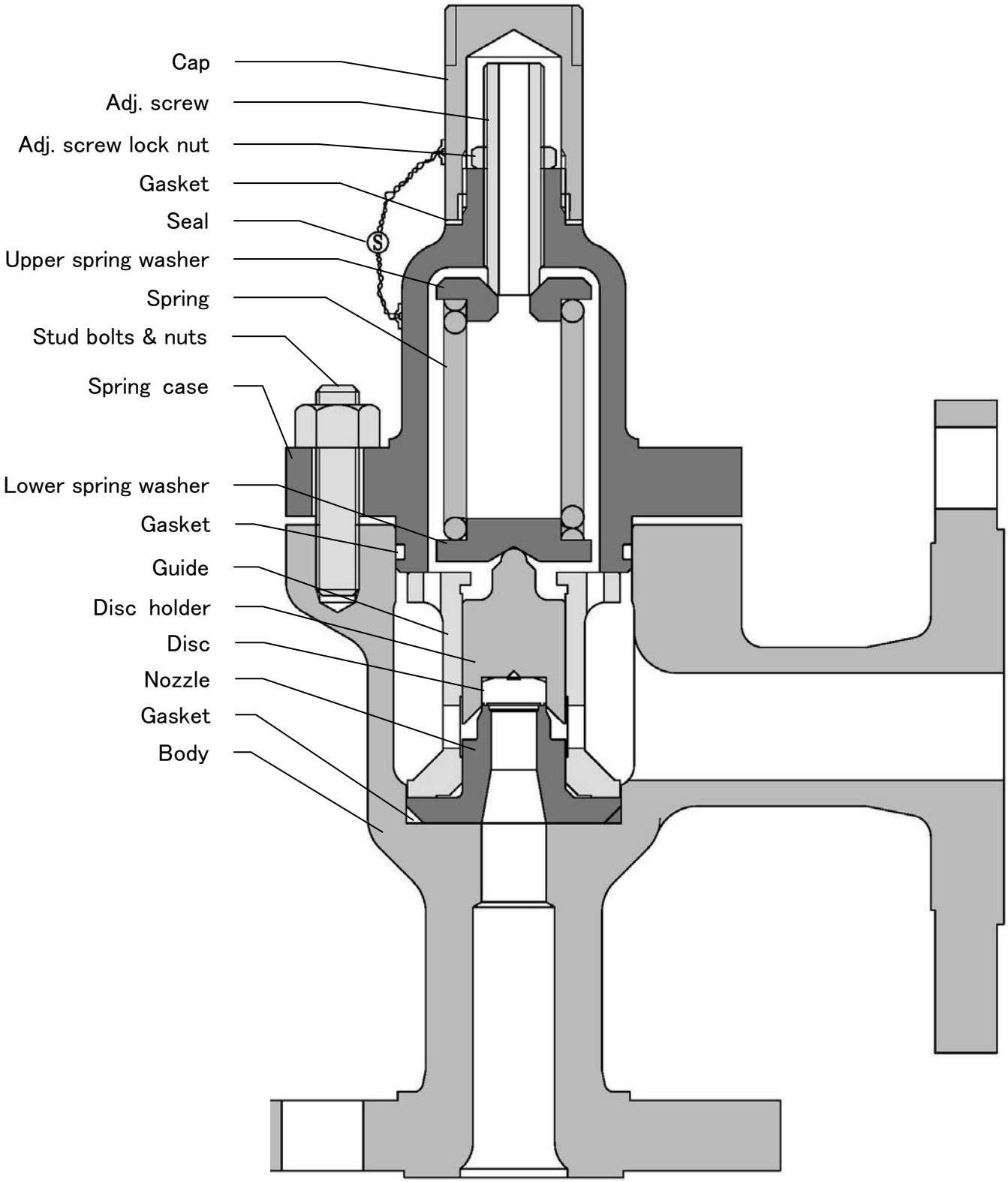

Parts name and standard materials

・Full nozzle type

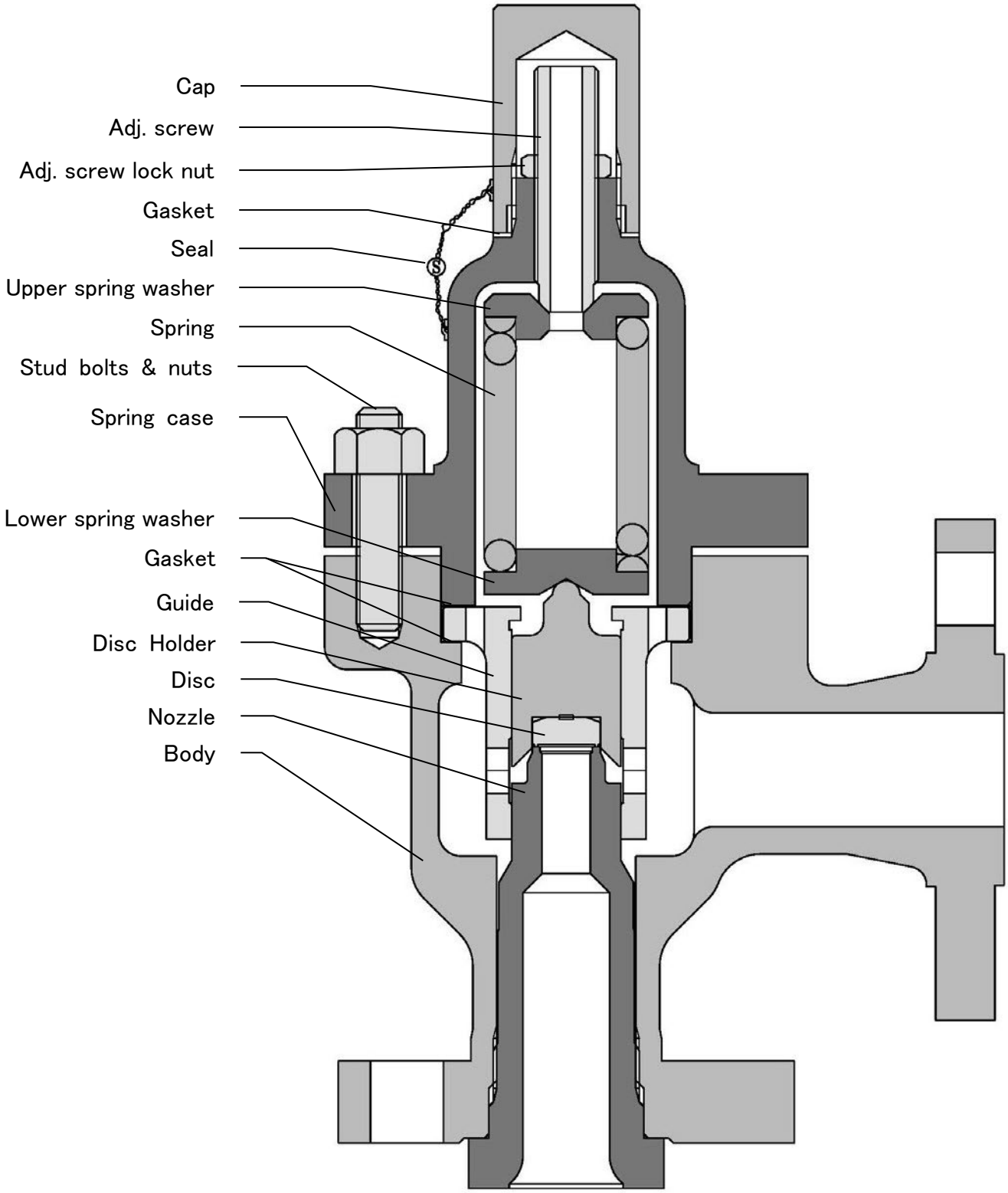

Parts name and materials

・Semi nozzle type

Parts name	Material code			
	Blank	C5	S	S1
Body	SCPH2 or A216-WCB	SCPL2 or A352-LCB	SCS13A or A351-CF8	SCS14A or A351-CF8M
Spring case	SCPH2 or A216-WCB	SCPL2 or A352-LCB	SCS13A or A351-CF8	SCS14A or A351-CF8M
Cap	SUS304			SUS316
Nozzle	SUS304 HF			SUS316 HF
Disc	BISHILITE			
Disc holder	SUS304 or B637-N07750			SUS316 or B637-N07750
Guide	SUS304			SUS316
Adj. screw	SUS304			SUS316
Adj. screw lock nut	SUS304			SUS316
Upper/Lower spring washer	SUS304			SUS316
Spring	SUS304			SUS316
Stud bolt	SNB7 or A193-B7	SUS304 or A193-B8		SUS316 or A193-B8M
Nut	S45C or A194-2H	SUS304 or A194-8		SUS316 or A194-8M
Gasket(Cap-Spring case)	PTFE			
Gasket(Spring case-Body)	NBR ※1			
Gasket(Body-Nozzle、Ordinary temperature)	NBR ※1			
Gasket(Body-Nozzle、Low temperature)	PFA			

※1 Subject to change as appropriate depending on service temperature/environmental conditions

Parts name and materials

・Full nozzle type

Parts name	Material code			
	Blank	C5	S	S1
Body	SCPH2 or A216-WCB	SCPL2 or A352-LCB	SCS13A or A351-CF8	SCS14A or A351-CF8M
Spring case	SCPH2 or A216-WCB	SCPL2 or A352-LCB	SCS13A or A351-CF8	SCS14A or A351-CF8M
Cap	SUS304			SUS316
Nozzle	SUS304 HF			SUS316 HF
Disc	BISHILITE			
Disc holder	SUS304 or B637-N07750			SUS316 or B637-N07750
Guide	SUS304			SUS316
Adj. screw	SUS304			SUS316
Adj. screw lock nut	SUS304			SUS316
Upper/Lower spring washer	SUS304			SUS316
Spring	SUS304			SUS316
Stud bolt	SNB7 or A193-B7	SUS304 or A193-B8		SUS316 or A193-B8M
Nut	S45C or A194-2H	SUS304 or A194-8		SUS316 or A194-8M
Gasket(Cap-Spring case)	PTFE			
Gasket(Spring case-Body)	PFA			

Dimension and weight

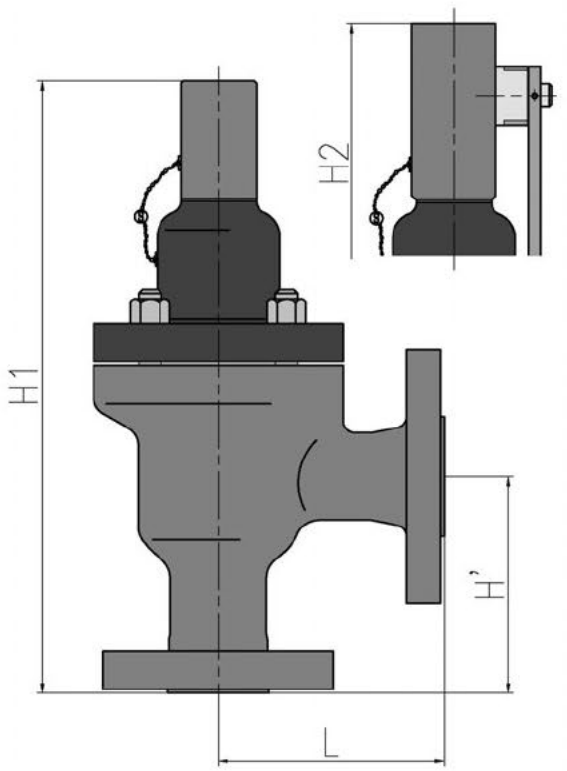

ASME・JPI flange type dimension table

Inlet connection		Outlet connection		Orifice area (mm²)	H' (mm)	L (mm)	H1 (mm)	H2 (mm)	Weight (kg)
Class	Size	Class	Size						
Class150	3/4B	Class150	1B	88.2	92	96	260	285	7.0
Class300									7.5
Class600					98				8.0
Class150	1B	Class150	1B	88.2	92	96	260	285	7.5
Class300									8.0
		Class300							
Class600		Class150			99				8.5
		Class300							
Class150	1B	Class150	2B	88.2	105	114	275	300	9.0
Class300									9.5
		Class300							
Class600		Class150							10.0
		Class300							

Dimension and weight

JIS flange type

Inlet connection		Outlet connection		Orifice area (㎟)	H' (mm)	L (mm)	H1 (mm)	H2 (mm)	Weight (kg)
PN	DN	PN	DN						
10K	20A	10K	25A	88.2	92	96	260	285	7.0
20K									7.0
30K									7.5
10K	25A	10K	25A	88.2	92	96	260	285	7.5
20K									7.5
30K					94				8.0

Note: RTE is certified for ASME Certification No. 27144 (27133).

Caps structure code

Type A

(Screwed cap)

Standard type

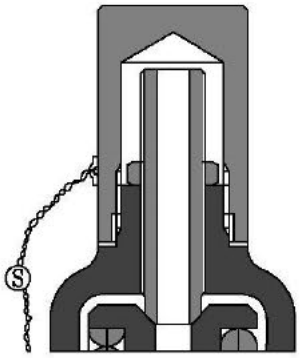

Type M

(Closed lever)

This cap type needs a test lever and is used when gas tightness is required at the exhaust side.

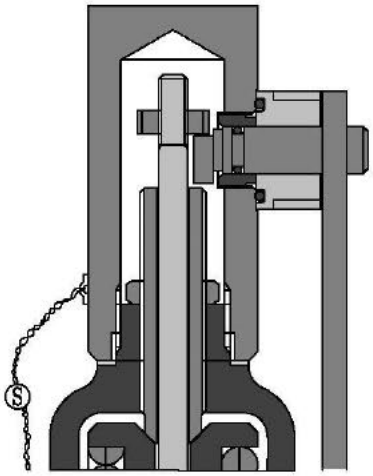

Type B

(Screwed cap with test gag)

A test gag is convenient in performing a hydrostatic pressure test or a blowout test. The gag should be finger tight.
When the test is complete, be sure to replace it with a plug. Failure to do so may cause the safety valve not to operate, creating a dangerous situation.

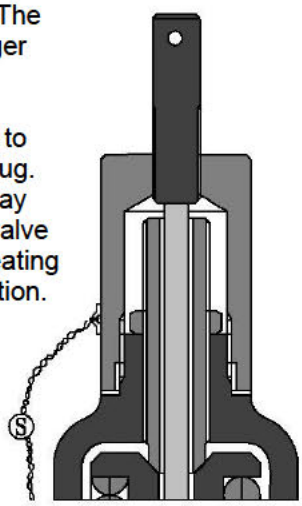

Type N

(Closed lever with test gag)

A version of Type M with a test gag

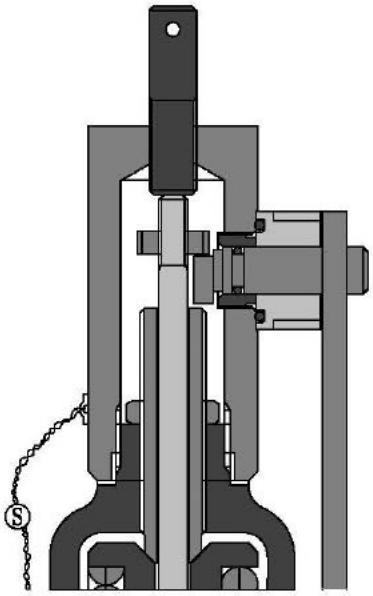

API pressure vs. temperature standard

Body & Bonnet		Flange rating		Maximum set pressure (MPa)				
				Temperature (℃)				
		Inlet	Outlet	−196 to −59.4	−59.4 to −29.4	−29.4 to −5	−5 to 37.8	232
Carbon steel	SCPH2 WCB	150	150			1.96*1	1.96	1.27
		300	150/300			5.1*1	5.1	4.24
		600	150/300			10.2*1	10.2	8.51
Stainless steel	SCS13A CF8	150	150	1.89	1.89	1.89	1.89	1.24
		300	150/300	4.96	4.96	4.96	4.96	3.41
		600	150/300	9.92	9.92	9.92	9.92	6.82

*1 Only WBC

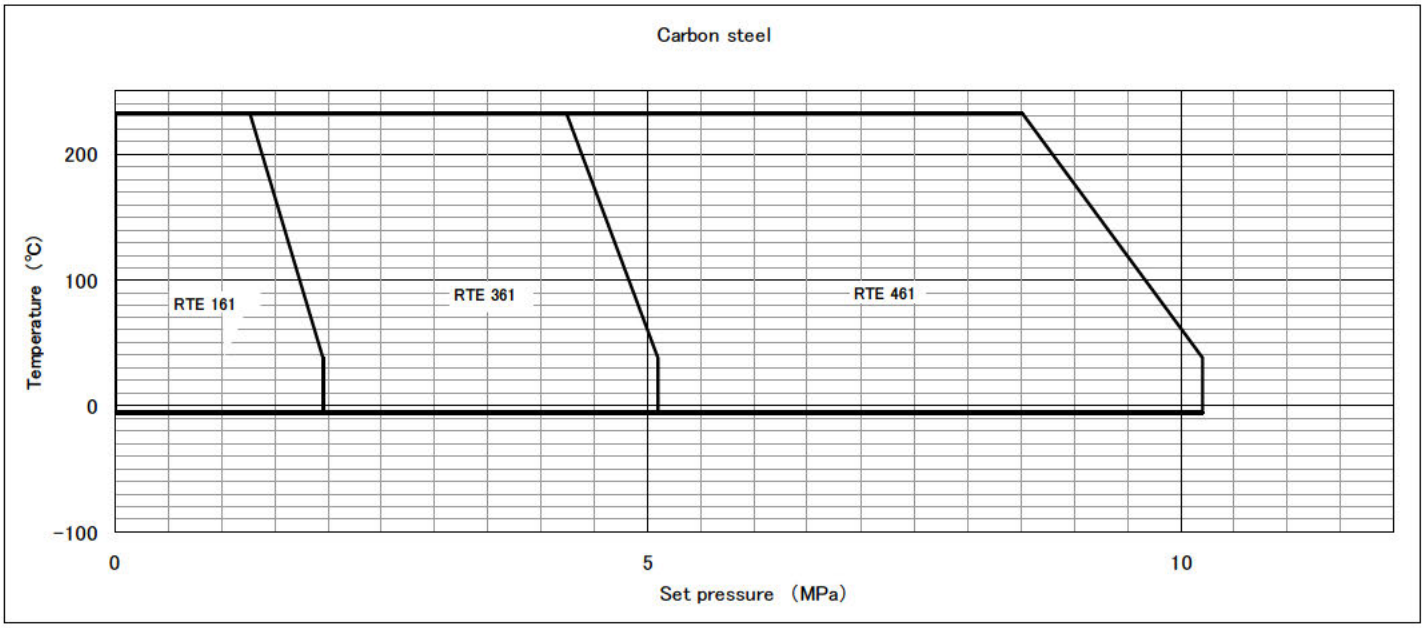

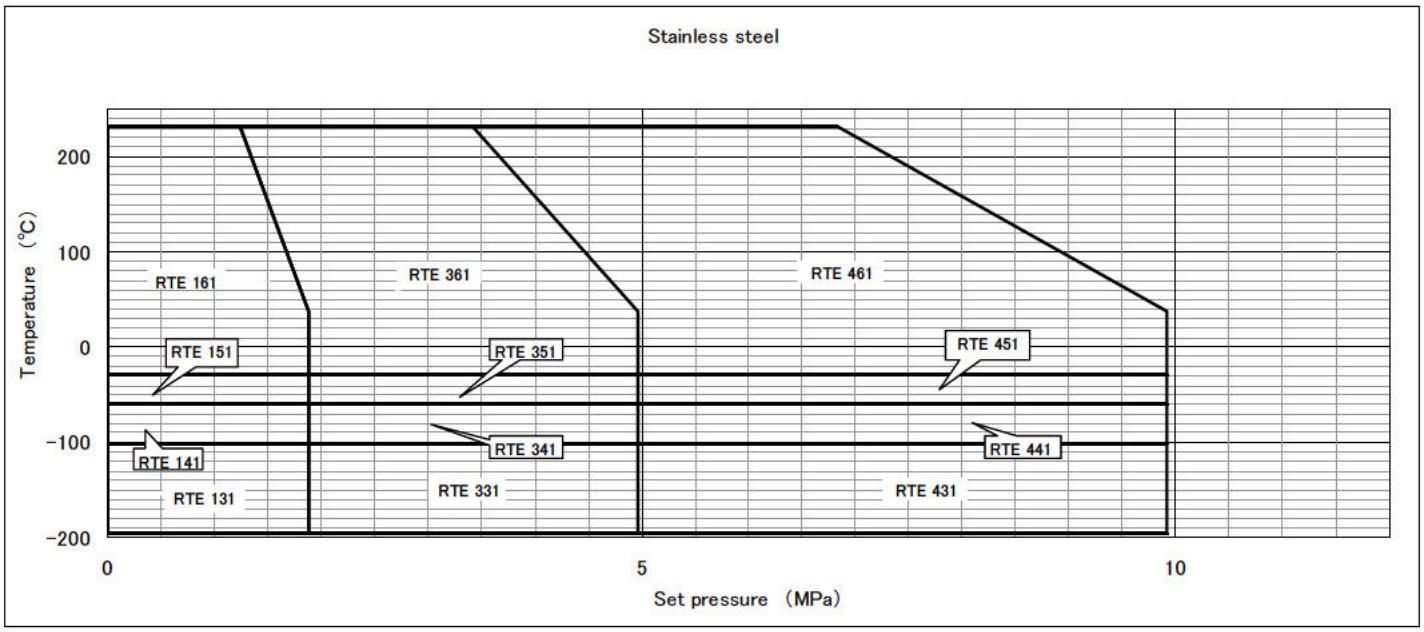

JIS pressure vs. temperature standard

Body & Bonnet		Flange rating		Maximum set pressure (MPa) Temperature (℃)						
		Inlet	Outlet	−196	−59.4	−29	−5	37.8	120	232
Carbon steel	SCPH2 WCB	10K	10K			1.4*1	1.4	1.4	1.4	1.17
		20K	10K			1.96*1	1.96	1.96	1.96	1.96
		30K	10K			5.1*1	5.1	5.1	4.73	4.24
Stainless steel	SCS13A CF8	10K	10K	1.4	1.4	1.4	1.4	1.4	1.4	1.17
		20K	10K	1.89	1.89	1.89	1.89	1.89	1.61	1.24
		30K	10K	4.96	4.96	4.96	4.96	4.96	4.3	3.41

*1 Only WBC

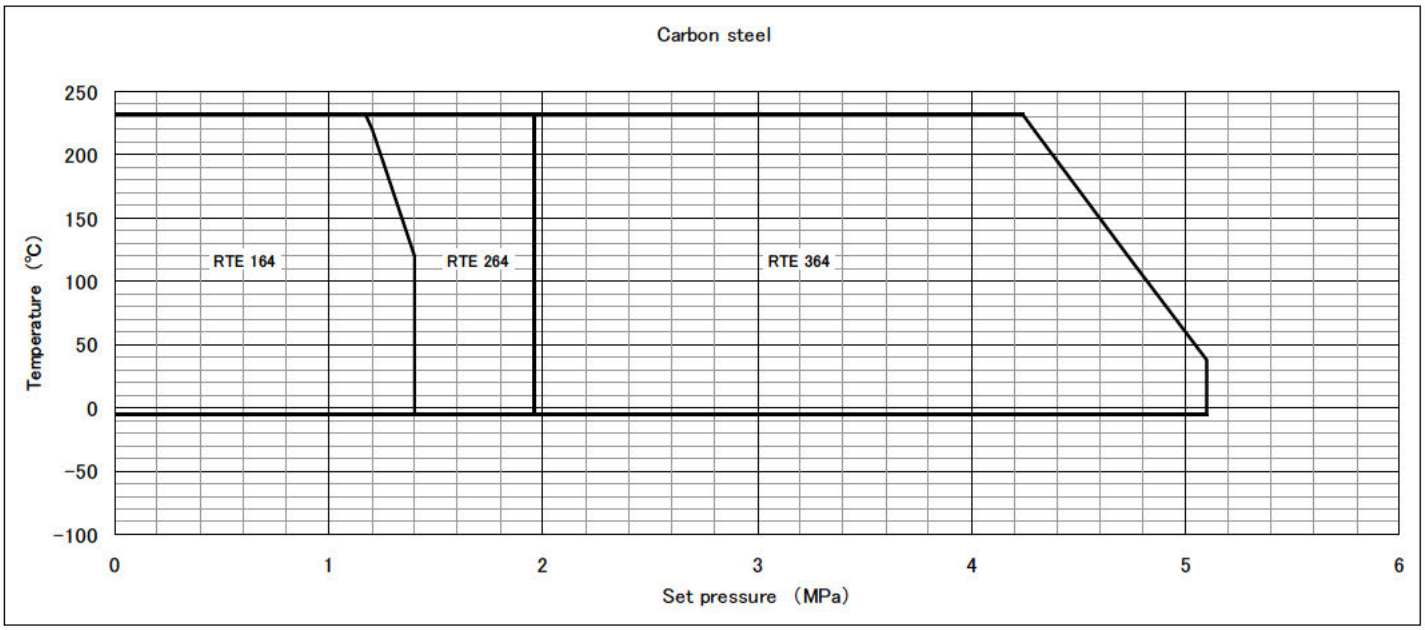

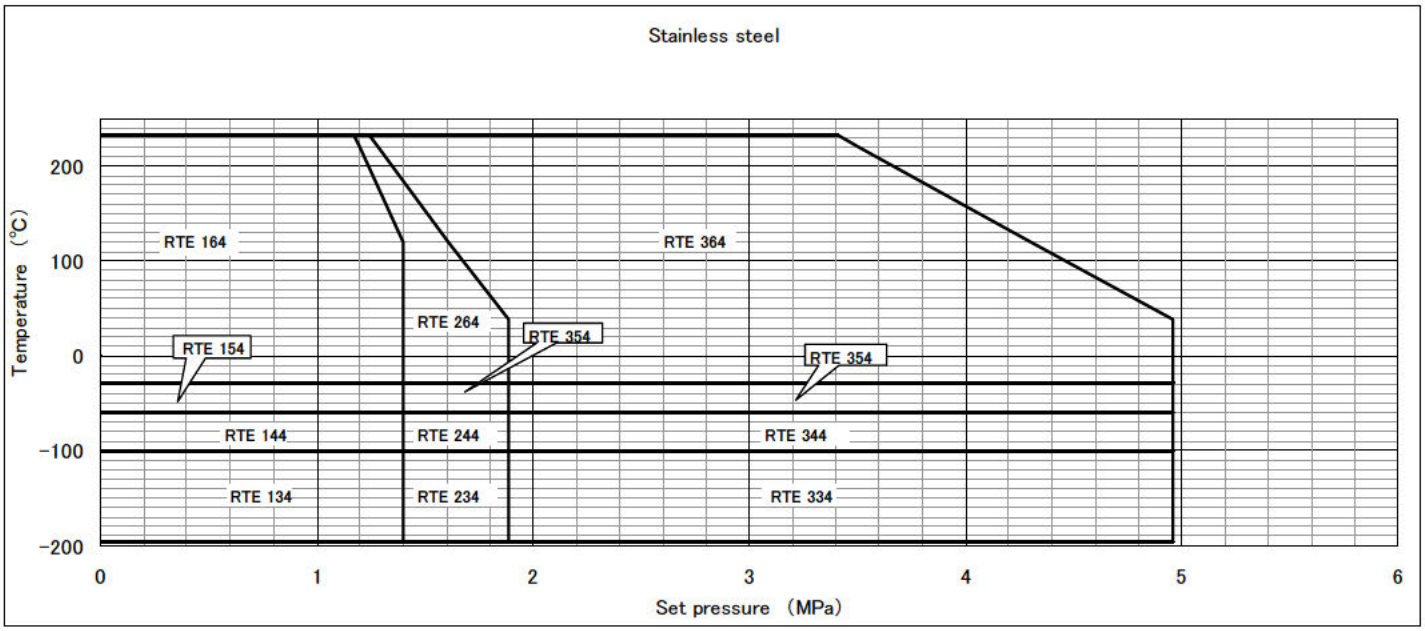

CATALOG No. EVDW190401E

Vacuum Relief Valves

EVDW Series

FUKUI SEISAKUSHO CO., LTD.

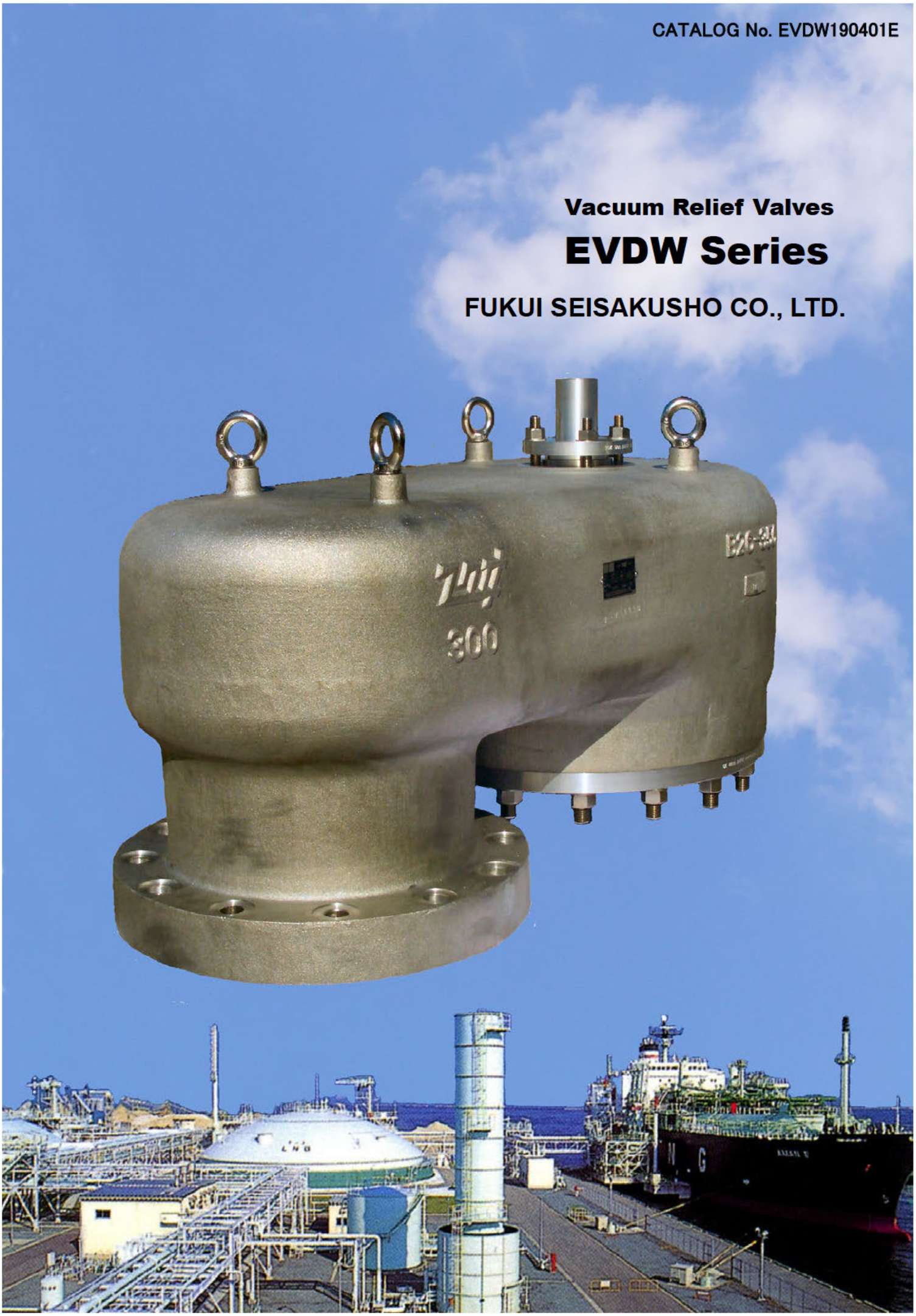

CATALOG No. EVDW190401E

Vacuum Relief Valves

EVDW Series

FUKUI SEISAKUSHO CO., LTD.

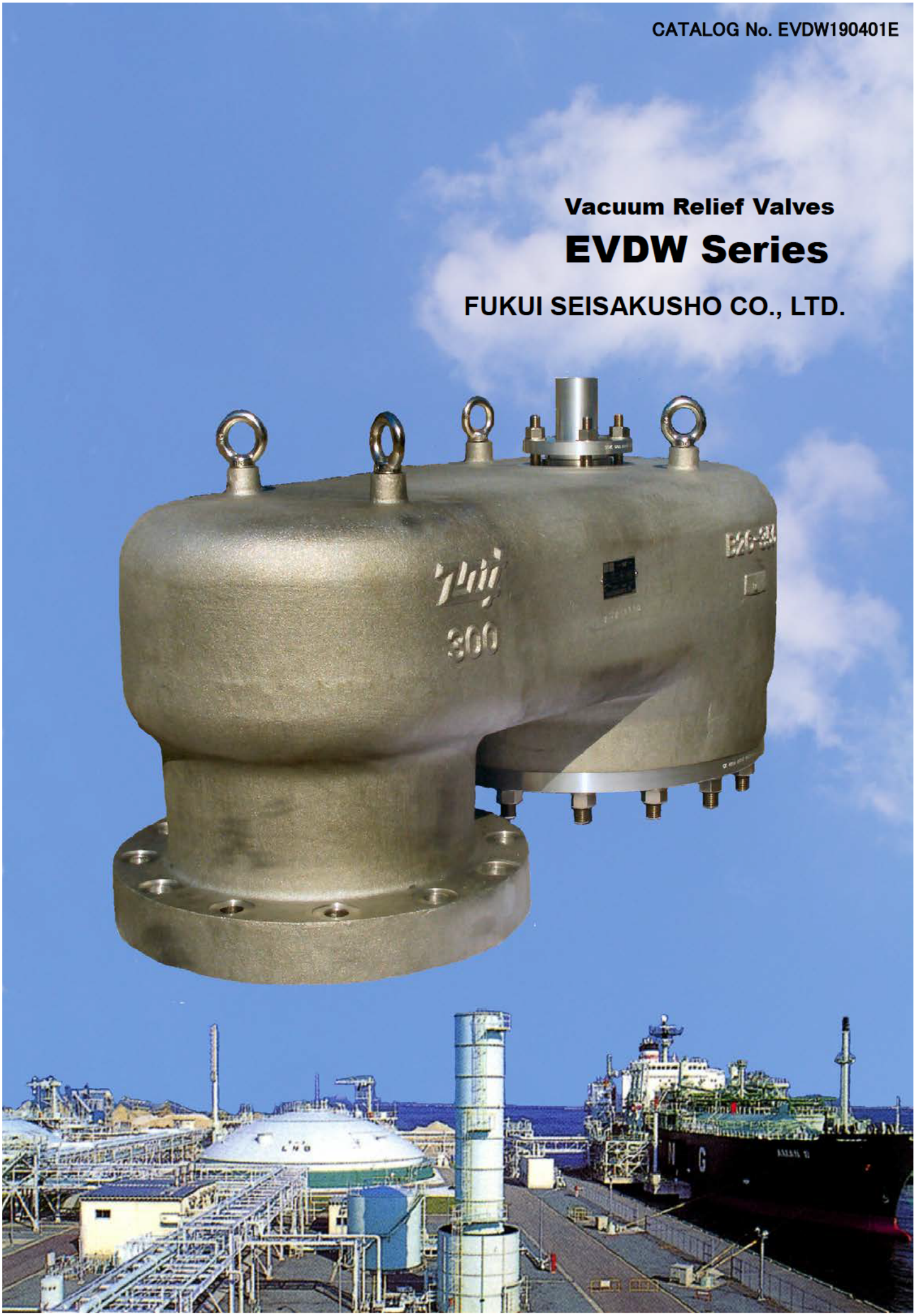

Our achievements in the field of liquefied gas have finally come to fruition as products

The issue of the recent global warming that is ever worsening environmental problems has highlighted “natural gas” as a clean energy source that will replace oil and coal, for environmental protection on an international level.
Based upon our firsthand experience and know-how acquired on site with respect to the processes from transportation to storage of natural gas in a liquefied form, we at Fukui are now able to provide vacuum valves that operate in extreme environments of very small pressure.

Parts name and Materials

Pressure range: −0.22 kPa ～−0.66 kPa

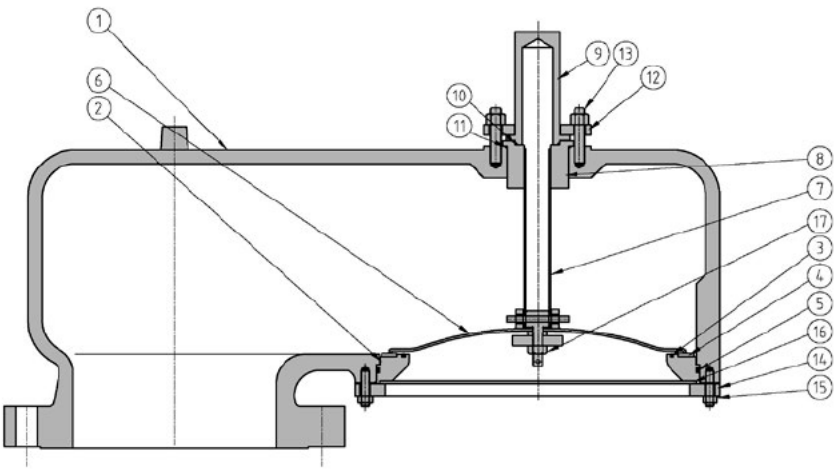

No.	Parts name	Material
1	Body	SCS13A, SCS14A, WCB or AC4C-T6
2	Nozzle	Stainless steel
3	O-ring	NBR
4	Seat	CR sponge
5	O-ring	NBR
6	Disc	Stainless steel
7	Spindle	Stainless steel
8	Guide	Stainless steel
9	Cap	Stainless steel
10	O-ring	NBR
11	O-ring	NBR
12	Retainer	Stainless steel
13	Stud bolt	Stainless steel
14	Nozzle retainer	Stainless steel
15	Stud bolt	Stainless steel
16	Screen	Stainless steel
17	Lock nut	Stainless steel

Code system

EVDW	1	6	1	–	S	–	R

Series code

Addition symbol	
Symbol	Type
No symbol	Normal type
R	Flow capacity enhanced type

Pressure class code		
Symbol	Pressure class	
	JIS	ASME , JPI
1	10k	150#

Temperature classification code	
Symbol	Maximum service temperature
6	~80℃

Special material code		
Symbol	Material	
	JIS	ASTM
No symbol	SCPH2	A216-WCB
S	SCS13A	A351-CF8
S1	SCS14A	A351-CF8M
A	AC4C-T6	B26-356.0-T6

Inlet connection code	
Symbol	Inlet connection
1	ASME flange standard
2	JPI flange standard
4	JIS pipe flange

Dimensions and Weight

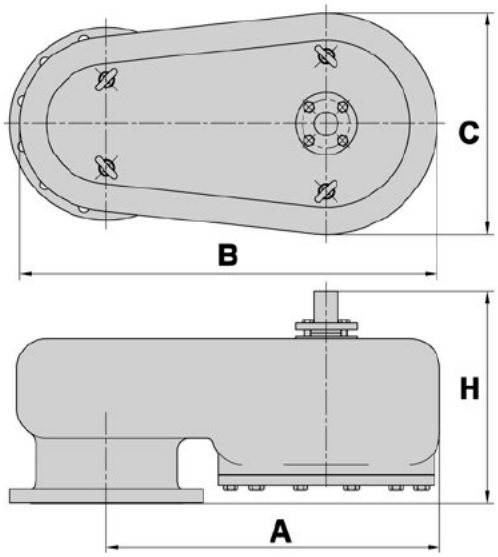

Inlet flange	A (mm)	B (mm)	C (mm)	H (mm)	Weight(kg)
ASME 150Lb 8B RF	560	700	370	440	150
ASME 150Lb 10B RF	680	860	460	550	250
ASME 150Lb 12B RF	840	1070	560	650	350
ASME 150Lb 12B RF (-R)	890	1110	620	650	400

PSL-MD Series

for resources development field

FUKUI SEISAKUSHO CO., LTD.

Products based on real accomplishments in the field of rocket fuel, helium gas and liquefied gas.

The recent global warming has enhanced the impact on the environment. Natural gas has captured much of the spotlight as clean energy to take the place of petroleum and coal.
Based on FUKUI experience and know-how in the field of liquefied gas such as transportation and storage of natural gas, PSL series copes with harsh environments of ultralow temperatures and slight pressures.

Features of safety valves for liquefied gas carrier tank

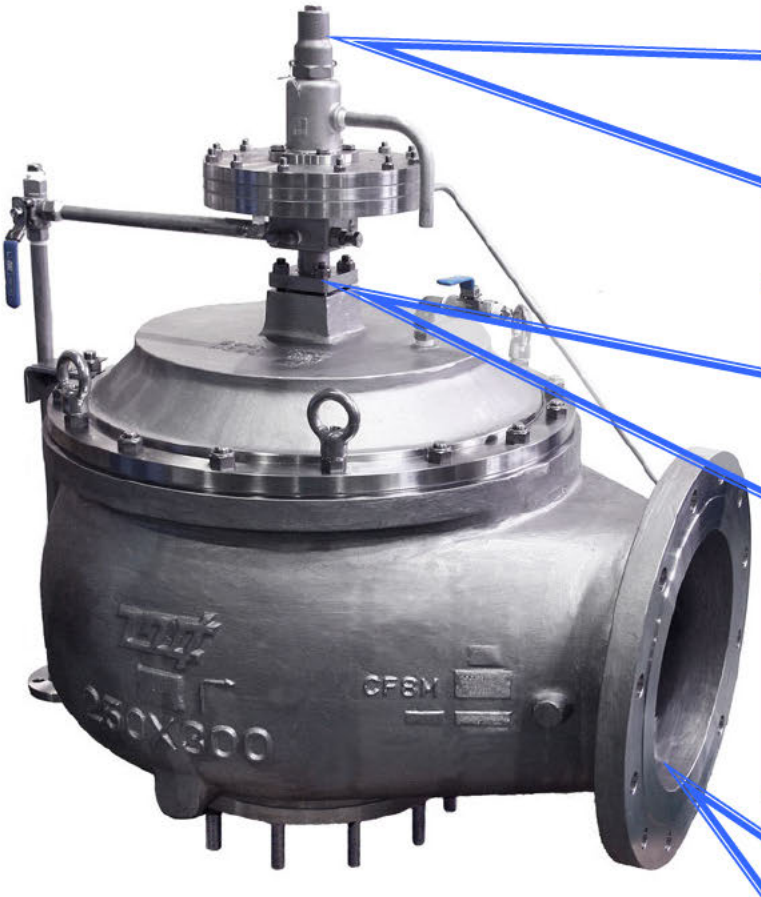

The popping pressure can be changed during use !

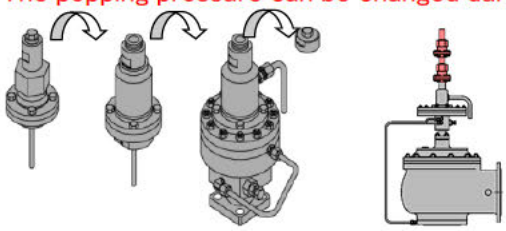

In the case of the conventional safety valves, it was not possible to change the popping pressure easily.
In the case of PSL series, the popping pressure can be changed easily and securely according to the works by stacking the multiple set (pressurizing unit).

Precise operating performance !

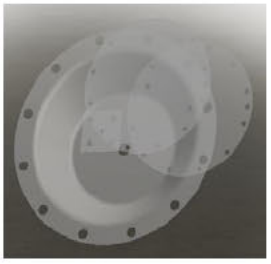

A teflon diaphragm excellent in durability and corrosion resistivity is used. It is possible to support all kinds of resource. Both of precise operating performance and reduction in maintenance are realized.
A flange structure is used for installing the pilot. This prevents a malfunction due to looseness of the connection caused by vibration etc.

High airtightness !

The main valve uses a membrane seat structure that prevents resource from leaking. Teflon is used as the sealing material to prevent the seal performance from being degraded due to deterioration with age, thereby completely protecting important resource.

Model code

PSL-MD	1	3	-	1	6	1	-	N	S1	(B)

Series code

Pilot valve code

Designation	Description
1	Single pilot, Single set
2	Single pilot, Multiple set
3	Dual pilot, Single set
4	Dual pilot, Multiple set
6	Vacuum only

Main valve structure code

Designation	Description
2	Flangeless type Without diaphragm support
3	Flangeless type With diaphragm support
4	Flange type With diaphragm support

Pressure class code

Designation	Pressure class	
	JIS	ASME , JPI
1	10K	150#
2	20K	300#
3	30K	300#

Cap code

Designation	Description
A	Closed type
B	Closed type with test gag

Valve body material code

Designation	Material	
	JIS	ASTM
(Blank)	SCPH2	A216 Gr.WCB
C5	SCPL1	A352 Gr.LCB
S	SCS13A	A351 Gr.CF8
S1	SCS14A	A351 Gr.CF8M
S2	SCS19A	A351 Gr.CF3
S3	SCS16A	A351 Gr.CF3M
A	AC4C-T6	B26 356.0-T6

Addition code

Designation	Description
(Blank)	Guide casting or none
N	Guide plate material
D	Guide plate material Sealed LNGC
T	Guide plate material Disc titanium

Inlet connection code

Designation	Inlet connection
1	ASME flange standards
2	JPI flange standards
4	JIS B 2220
5	Customer designation (Special connection)

Temperature class code

Designation	Operating temperature range
3	-196.0 ～ -101.1°C
4	-101.1 ～ -59.4°C
5	-59.4 ～ -29.0°C
6	-29.0 ～ 232.0°C

PSL-MD( )2-( ) ( ) ( )

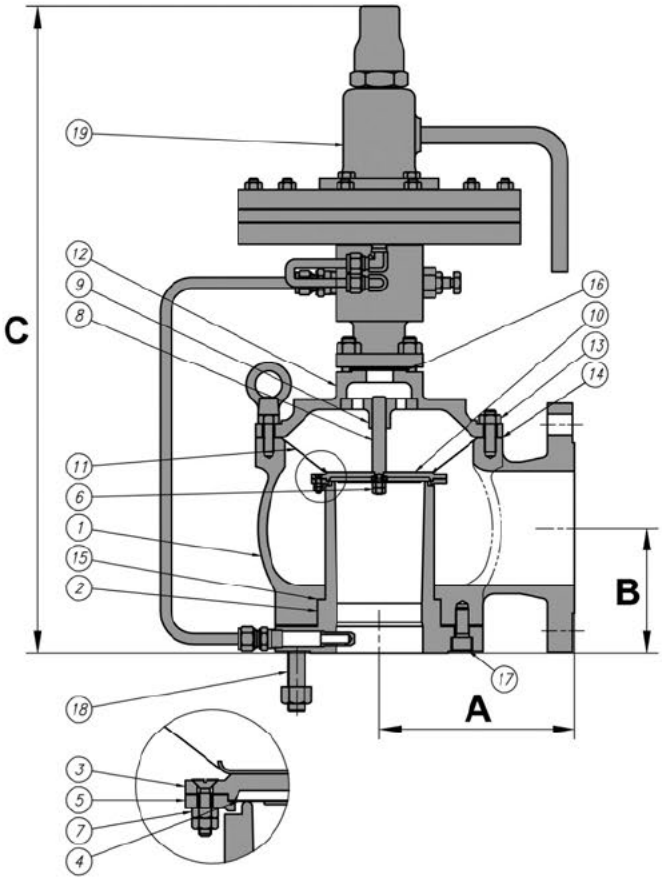

■Standard material

Model code		PSL-MD()2-()()()-A	PSL-MD()2-()()()-S	PSL-MD()2-()()()-C5	PSL-MD()2-()()()-S1
Temperature range		-196.0 ～ 125℃		-45 ～ 125℃	-196.0 ～ 125℃
1	Body ※1	AC4C-T6	SCS13A	SCPL1	SCS14A
2	Nozzle	SUS304 or SCS13A			SUS316 or SCS14A
3	Disc	SUS304			SUS316
4	Seat	Teflon			Teflon
5	Disc retainer	SUS304			SUS316
6	Disc center nut	SUS304			SUS316
7	Retainer bolt & nut	SUS304			SUS316
8	Spindle	SUS304			SUS316
9	Guide	SUS304			SUS316
10	Upper diaphragm set plate	SUS304			SUS316
11	Diaphragm	Teflon			Teflon
12	Cover ※1	AC4C-T6	SCS13A	SCPL1	SCS14A
13	Bolt & nut	SUS304			SUS316
14	Gasket	Teflon			Teflon
15	Gasket	Teflon			Teflon
16	Gasket	Teflon			Teflon
17	Nozzle seat installation bolt	SUS304			SUS316
18	Inlet bolt & nut	SUS304			SUS316
19	Pilot valve	SUS304 or SCS13A			SUS316 or SCS14A

※1　The temperature range varies depending on the main body material.

■Dimension list

Operating pressure range		1 ～ 10kPa (0.01～0.1bar)					
Size		INLET (ASME150LB) × OUTLET(ASME150LB)					
		2×2	3×3	4×4	6×6	8×8	10×10
Orifice area	cm^2	21.647	47.783	82.194	186.265	334.587	479.163
Dimension (mm)	A	150	180	200	315	400	500
	B	105	115	140	175	200	230
	C	580	620	700	820	900	975
Weight (kg)		45	65	100	160	240	380

※2　If the main body material is an aluminum , inquire for the dimensions.

PSL-MD( )3-( ) ( ) ( )-N

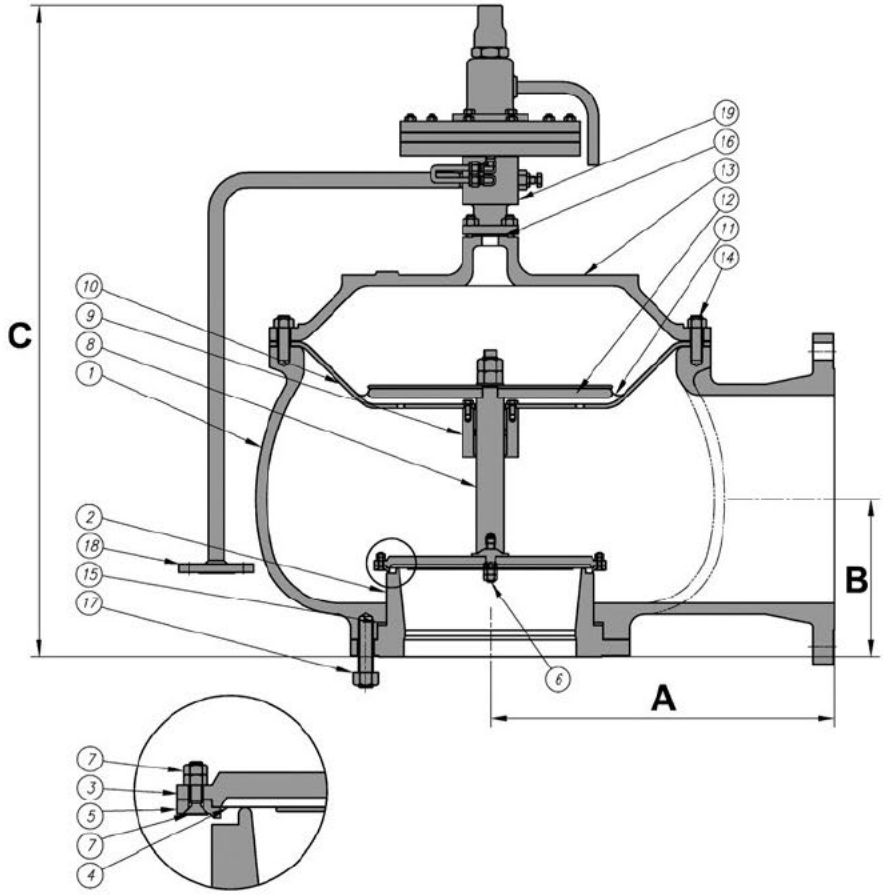

■Standard material

Model code		PSL-MD()3-()()()-NA	PSL-MD()3-()()()-NS	PSL-MD()3-()()()-NC5	PSL-MD()3-()()()-NS1
Temperature range		-196 ～ 125˚C		-45 ～ 125˚C	-196 ～ 125˚C
1	Body ※1	AC4C-T6	SCS13A	SCPL1	SCS14A
2	Nozzle	SUS304 or SCS13A			SUS316 or SCS14A
3	Disc	SUS304			SUS316
4	Seat	Teflon			Teflon
5	Disc retainer	SUS304			SUS316
6	Disc center nut	SUS304			SUS316
7	Retainer bolt & nut	SUS304			SUS316
8	Spindle	SUS304			SUS316
9	Guide	SUS304			SUS316
10	Diaphragm cover	SUS304			SUS316
11	Diaphragm	Teflon			Teflon
12	Diaphragm retainer	SUS304			SUS316
13	Cover ※1	AC4C-T6	SCS13A	SCPL1	SCS14A
14	Bolt & nut	SUS304			SUS316
15	Gasket	Teflon			Teflon
16	Gasket	Teflon			Teflon
17	Inlet bolt & nut	SUS304			SUS316
18	Remote pickup flange & pipe	SUS304			SUS316
19	Pilot valve	SUS304 or SCS13A			SUS316or SCS14A

※1 The temperature range varies depending on the main body material.

※2 The inlet and outlet flange based on the JIS standard is also manufactured. In this case, there may be cases where a semi-nozzle is used.

■Dimension list

Operating pressure range		5 ～ 250kPa (0.05～2.5bar)				
Size		INLET (ASME150LB) × OUTLET (ASME150LB)				
		4×6	6×8	8×10	10×12	12×16
Orifice area	cm^2	82.194	186.265	334.587	479.163	759.644
Dimension (mm)	A	200	315	400	500	560
	B	140	175	200	230	250
	C	665	780	860	935	1025
Weight (kg)		120	200	280	400	600

※3 If the main body material is an aluminum , inquire for the dimensions.

PSL-MD( )3-( ) ( ) ( )

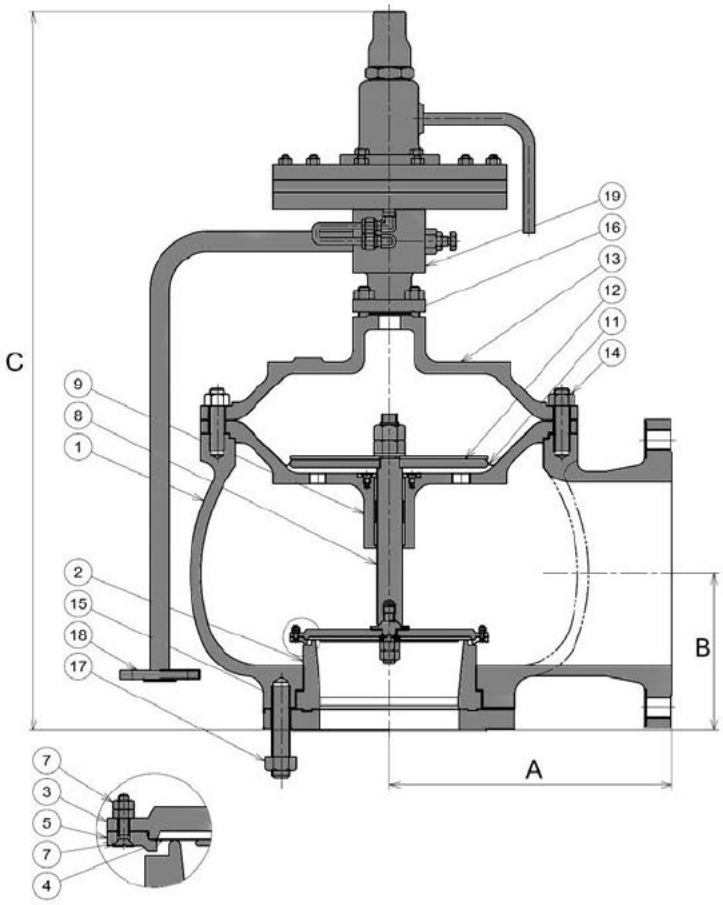

■Standard material

Model code		PSL-MD()3-()()()-A	PSL-MD()3-()()()-S	PSL-MD()3-()()()-C5	PSL-MD()3-()()()-S1
Temperature range		-196 ～ 125˚C		-45 ～ 125˚C	-196 ～ 125˚C
1	Body ※1	AC4C-T6	SCS13A	SCPL1	SCS14A
2	Nozzle	SUS304 or SCS13A			SUS316 or SCS14A
3	Disc	SUS304			SUS316
4	Seat	Teflon			Teflon
5	Disc retainer	SUS304			SUS316
6	Disc center bolt	SUS304			SUS316
7	Retainer bolt & nut	SUS304			SUS316
8	Spindle	SUS304			SUS316
9	Guide	SCS13A			SCS14A
11	Diaphragm	Teflon			Teflon
12	Diaphragm retainer	SUS304			SUS316
13	Cover ※1	AC4C-T6	SCS13A	SCPL1	SUS316 or SCS14A
14	Bolt & nut	SUS304			SUS316
15	Gasket	Teflon			Teflon
16	Gasket	Teflon			Teflon
17	Inert bolt & nut	SUS304			SUS316
18	Remote pickup flange & pipe	SUS304			SUS316
19	Pilot valve	SUS304 or SCS13A			SUS316 or SCS14A

※1 The temperature range varies depending on the main body material.

※2 The inlet and outlet flange based on the JIS standard is also manufactured. In this case, there may be cases where a semi-nozzle is used.

■Dimension list

Operating pressure range		3 ～ 250 kPaG (0.03～2.5bar)		
Size		INLET (ASME150LB) × OUTLET (ASME150LB)		
		2×3	3×4	14×18
Orifice area	cm^2	21.647	47.783	905.251
Dimension (mm)	A	150	180	630
	B	100	115	300
	C	550	590	1150
Weight (kg)		50	80	850

※3 If the main body material is an aluminum , inquire for the dimensions.

PSL-MD( )4-( ) ( ) ( )

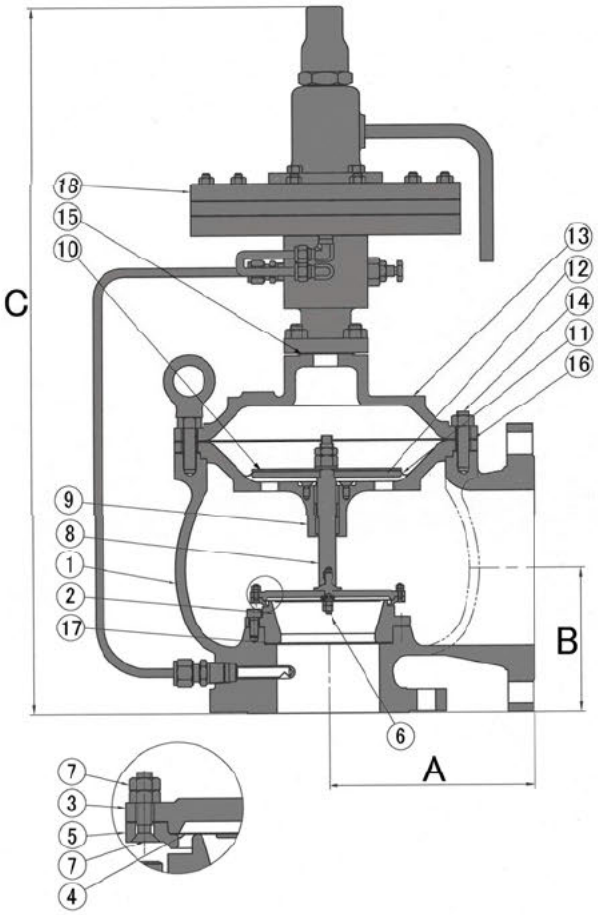

■Standard material

Model code		PSL-MD()4-()()()-A	PSL-MD()4-()()()-S	PSL-MD()4-()()()-C5	PSL-MD()4-()()()-S1
Temperature range		-196 ～ 125˚C		-45 ～ 125˚C	-196 ～ 125˚C
1	Body ※1	AC4C-T6	SCS13A	SCPL1	SCS14A
2	Nozzle	SUS304 or SCS13A			SUS316 or SCS14A
3	Disc	SUS304			SUS316
4	Seat	Teflon			Teflon
5	Disc retainer	SUS304			SUS316
6	Disc center bolt	SUS304			SUS316
7	Retainer bolt & nut	SUS304			SUS316
8	Spindle	SUS304			SUS316
9	Guide	SCS13A			SCS14A
10	Diaphragm set plate	SUS304			SUS316
11	Diaphragm	Teflon			Teflon
12	Diaphragm retainer	SUS304			SUS316
13	Cover ※1	AC4C-T6	SCS13A	SCPL1	SUS316 or SCS14A
14	Bolt & nut	SUS304			SUS316
15	Gasket	Teflon			Teflon
16	Gasket	Teflon			Teflon
17	Gasket	Teflon			Teflon
19	Pilot valve	SUS304 or SCS13A			SUS316 or SCS14A

※1 The temperature range varies depending on the main body material.

■Dimension list

Operating pressure range		5 ～ 250 kPaG (0.05～2.5bar)	
Size		INLET (ASME150LB) × OUTLET (ASME150LB)	
		2×3	3×4
Orifice area	cm^2	19.635	44.178
Dimension (mm)	A	150	180
	B	125	160
	C	570	630
Weight (kg)		50	80

※2 If the main body material is an aluminum , inquire for the dimensions.

PSL-MD( )4-( ) ( ) ( )-N

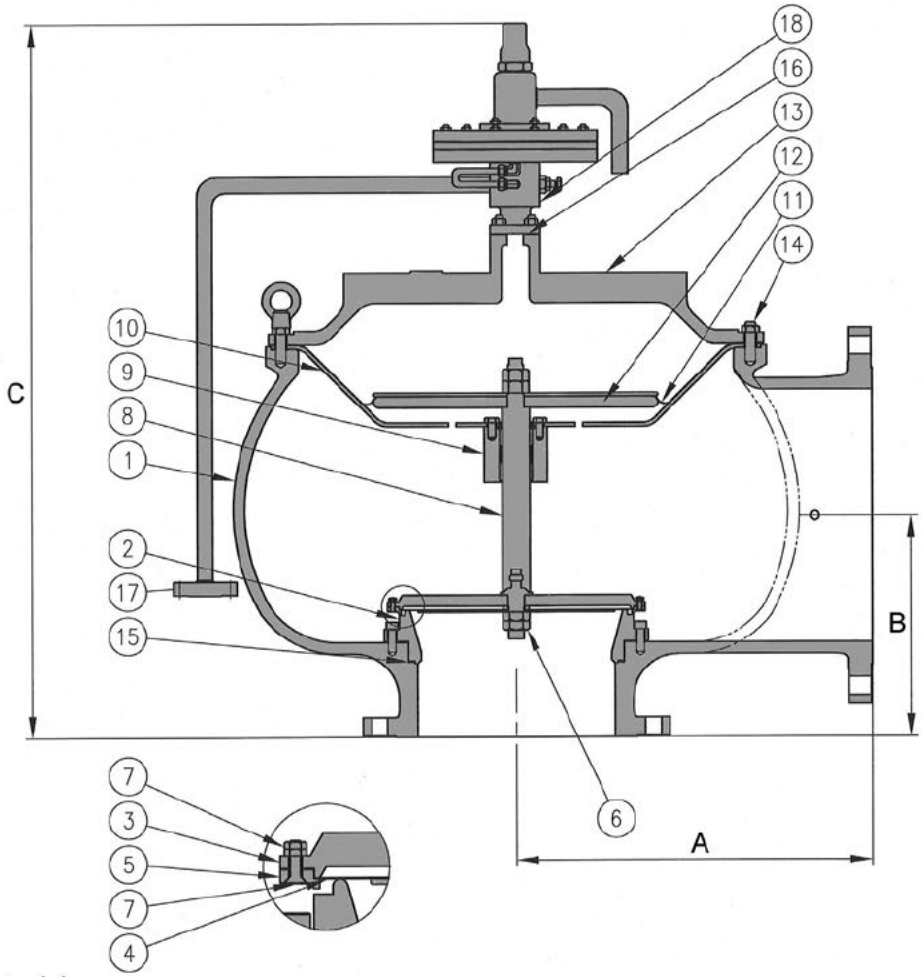

■Standard material

Model code		PSL-MD()4-()()()-NA	PSL-MD()4-()()()-NS	PSL-MD()4-()()()-NC5	PSL-MD()4-()()()-NS1
Temperature range		-196～125˚C		-45～125˚C	-196～125˚C
1	Body ※1	AC4C-T6	SCS13A	SCPL1	SCS14A
2	Nozzle	SUS304 or SCS13A			SUS316 or SCS14A
3	Disc	SUS304			SUS316
4	Seat	Teflon			Teflon
5	Disc retainer	SUS304			SUS316
6	Disc center bolt	SUS304			SUS316
7	Retainer bolt & nut	SUS304			SUS316
8	Spindle	SUS304			SUS316
9	Guide	SUS304			SUS316
10	Diaphragm cover	SUS304			SUS316
11	Diaphragm	Teflon			Teflon
12	Diaphragm retainer	SUS304			SUS316
13	Cover ※1	AC4C-T6	SCS13A	SCPL1	SCS14A
14	Bolt & nut	SUS304			SUS316
15	Gasket	Teflon			Teflon
16	Gasket	Teflon			Teflon
17	Remote pickup flange & pipe	SUS304			SUS316
18	Pilot valve	SUS304 or SCS13A			SUS316 or SCS14A

※1 The temperature range varies depending on the main body material.

■Dimension list

Operating pressure range		5 ～ 250 kPaG (0.05～2.5bar)				
Size		INLET (ASME150LB) × OUTLET (ASME150LB)				
		4×6	6×8	8×10	10×12	12×16
Orifice area	cm^2	78.539	176.714	314.159	490.873	706.858
Dimension (mm)	A	200	315	400	500	560
	B	180	200	240	290	300
	C	710	800	890	990	1120
Weight (kg)		120	200	280	400	600

※2 If the main body material is an aluminum , inquire for the dimensions.

PSL-MD/MP common specifications

Pilot valve pressure supply method

Internal pickup system

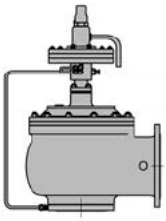

The pressure sensing section of the pilot valve is connected to the main valve inlet. Like the ordinary conventional safety valve, this valve can be used by only installing it on the piping and tank.
The pressure loss at the safety valve inlet piping and nozzle stub should be 3% or less.

Remote pickup system

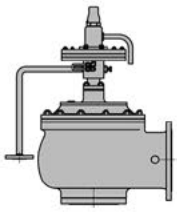

The pressure sensing section of the pilot valve is connected individually. This type prevents abnormal operation such as hunting when the pressure loss at the safety valve inlet piping and nozzle stub exceeds 3%.
The remote pick-up system is recommended as a safety valve for tank.

Pilot valve code

Code designation=1 ····· Single pilot, Single set

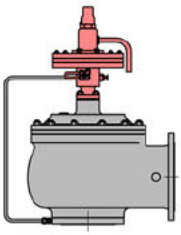

One pilot valve is installed on the main valve and one set pressure is controlled.

Code designation=2 ····· Single pilot, Multiple set

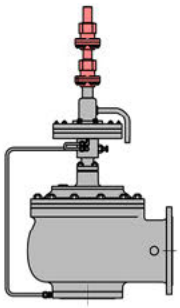

One pilot valve is installed on the main valve. Two to three set pressures can be controlled by fitting the auxiliary pressure unit to the pilot valve.

It is easy to respond to I.G.C. code 8.2.6.

Code designation=3 ····· Dual pilot, Single set

Code designation=4 ····· Dual pilot, Multiple set

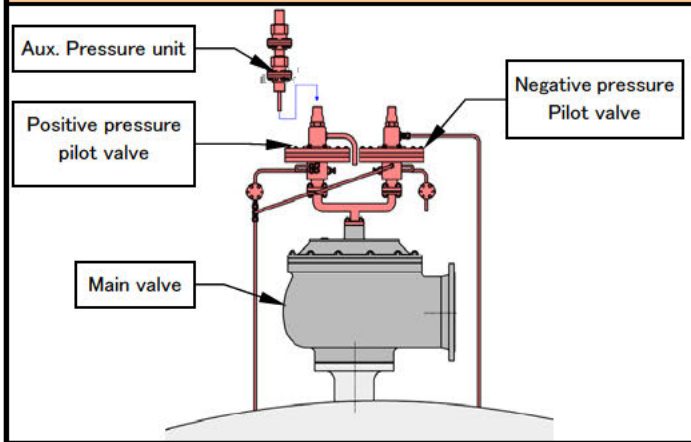

Two pilot valves are installed on one main valve. The pilot valves control two set pressures, positive and negative pressures, respectively.
(Code designation = 3)
For both positive and negative pressures, two to three set pressures can be controlled by fitting the aux. pressure unit to the pilot valve.
(Code designation = 4)

Code designation=6 ····· Vacuum only

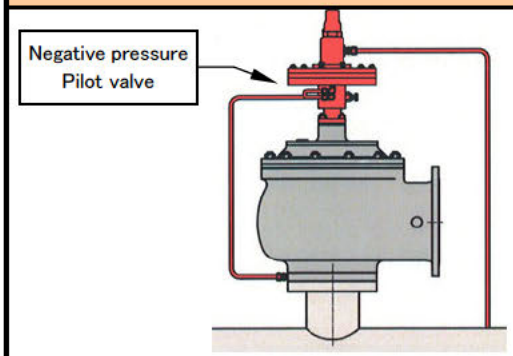

One vacuum pilot valve is installed on the main valve and one set negative pressure is controlled.

PSL-MD/MP common specifications

Accessory

Check valve

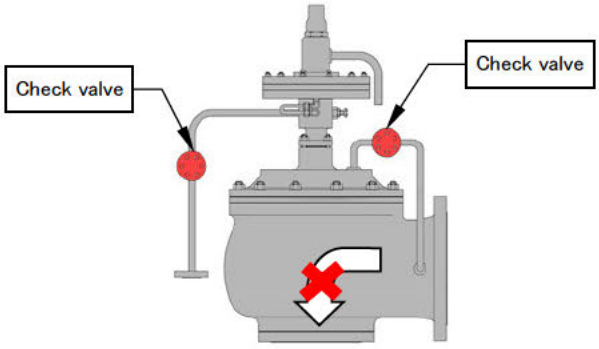

In the case of the safety valve with pilot valve, because of its structure, air is sucked from the main valve outlet to the inside of the vessel on which the valve is installed when the vessel becomes in a vacuum state. To avoid this, the check valve is installed on the supply line to prevent reverse flow.

Strainer

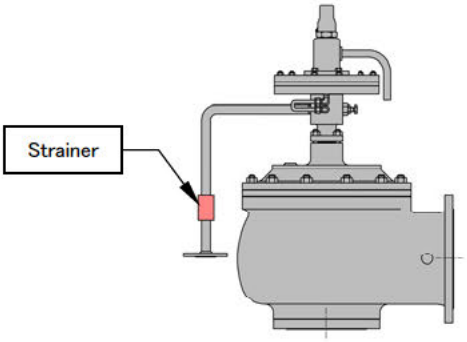

When there is scale or dirt in the vessel, it is necessary to use the strainer to protect the pilot valve and make it operate normally.

Manual lifting device

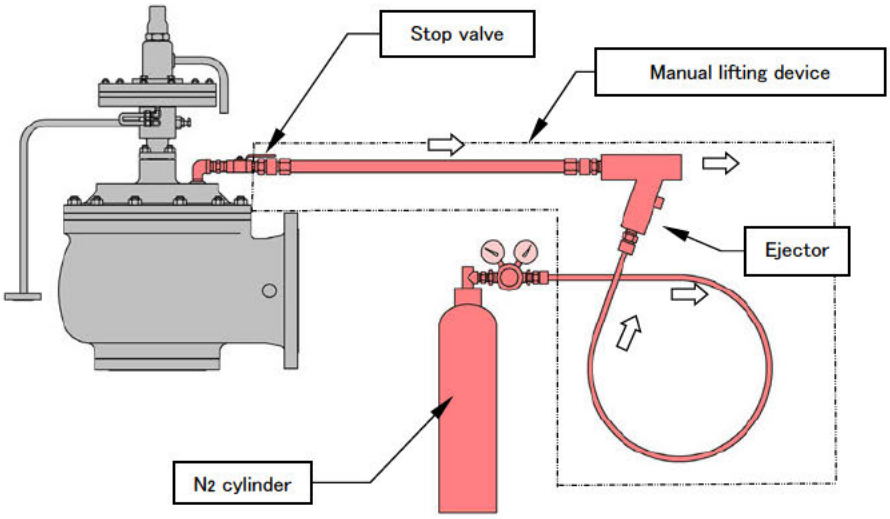

By drawing the pressure in the main valve dome with the manual lifting device using the flow of the pressure source such as a nitrogen cylinder, the operating performance of the main valve can be checked even if there is no pressure on the primary side of the safety valve with pilot valve.

Field test connector & test kit

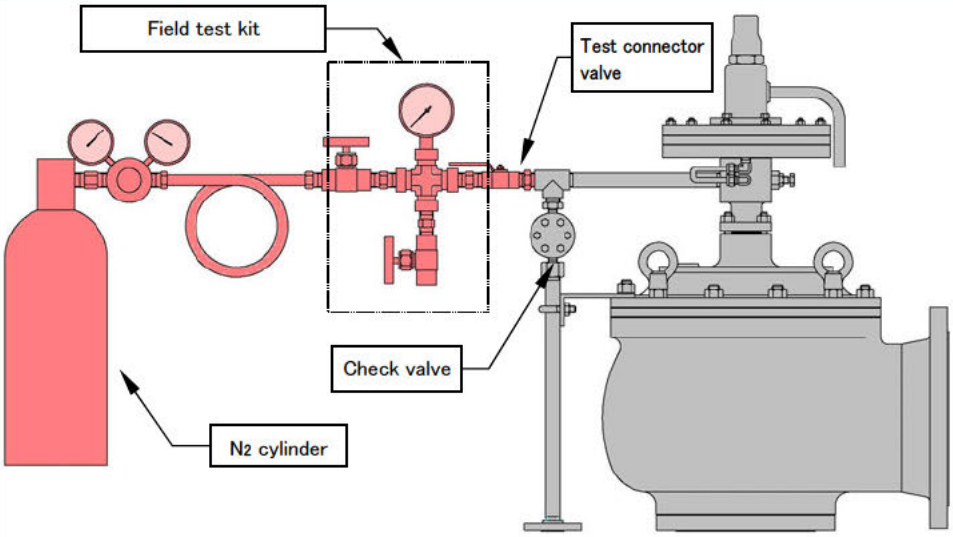

By using the field test kit, the popping pressure of the pilot valve can be checked with the safety valve installed on the equipment.
Because it is not necessary to remove the safety valve from the equipment or to use a large device, a simple and effective test can be conducted.

Warranty Conditions

Thank you for using FUKUI products.
Our products are made in standardized manufacturing processes and shipped after undergoing rigorous quality control. Nevertheless, in the event of a failure attributable to a manufacturing defect, we will either repair or replace the valve free of charge in accordance with the following warranty provisions. Please contact us if this warranty seems applicable.

1. **Warranty term**

The warranty extends 12 months from the time the valve comes into use, but the term may exceed 18 months after shipping.

2. **Warranty scope**

If a valve failure within the warranty term is fault of FUKUI, we will, at our cost, repair it or provide a replacement. However, failures shall not be covered by the warranty if any one of the following applies:

2-1 A valve leaks or exhibits unstable operation due to foreign matter or other substances in boilers or piping.
2-2 Improper treatment or use.
2-3 Failure results from a cause not attributable to FUKUI.
2-4 Improper repair or modification.
2-5 Treatment, storage, or use under severe conditions that exceed design specifications.
2-6 Parts declared to subjected to significant wear when in use
2-7 Fire, flood damage, earthquake, lightning strike and other extraordinary natural phenomena
2-8 In cases where an expert and/or special equipment including a crane and scaffolding are used for repairs, adjustments or dismantling/reinstalling of heavy valves at an elevated or dangerous location.

3. **Plants for use outside Japan**

If a valve failure occurs within the warranty term due to Fukui's fault, we will provide a free replacement on an FOB or ex-factory basis. However, this is not applicable if any one of the provisions in 2-1 to 2-8 above applies.

4. **After-sales service**

If you request for dispatch of a supervisor and/or worker(s) even during the warranty term, traveling expenses, accommodation charges, daily allowance and other necessary expenditure shall be separately charged.

Head Office & Factory

6. 1-chome, Shodai Tajika, Hirakata,
Osaka, Japan 573-1132
TEL +81-72-857-4521
FAX +81-72-857-3764
e-mail : fki@fkis.co.jp

Sales Office

Global Marketing Team

6. 1-chome, Shodai Tajika, Hirakata,
Osaka, Japan 573-1132
TEL +81-72-857-4527
FAX +81-72-857-3324
e-meil : stm@fkis.co.jp

Yokohama Office

TEL +81-45-441-4411
FAX +81-45-441-0031
e-mail : ybm@fkis.co.jp

FUKUI SEISAKUSHO CO., LTD.